READ THIS FIRST

VENTILATOR USER GUIDE

MODEL VM16-BL-SP

SUPERVAC

3RD PARTY TESTED AND CERTIFIED

DANGER

PERSONAL RESPONSIBILITY CODE

The member companies of FEMSA that provide emergency response equipment and services want responders to know and understand the following:

1. Firefighting and Emergency Response are inherently dangerous activities requiring proper training in their hazards and the use of extreme caution at all times.
2. It is your responsibility to read and understand any user's instructions, including purpose and limitations, provided with any piece of equipment you may be called upon to use.
3. It is your responsibility to know that you have been properly trained in Firefighting and/or Emergency Response and in the use, precautions, and care of any equipment you may be called upon to use.
4. It is your responsibility to be in proper physical condition and to maintain the personal skill level required to operate any equipment you may be called upon to use.
5. It is your responsibility to know that your equipment is in operable condition and has been maintained in accordance with the manufacturer's instructions.
6. Failure to follow these guidelines may result in death, burns or other severe injury.

FEMSA

Fire and Emergency Manufacturers and Services Association, Inc.
P.O. Box 147, Lynnfield , MA 01940 www.FEMSA.org

Copyright 2006 FEMSA. All Rights Reserved

USER GUIDE

This manual covers the description, cautions, operation, and maintenance of the Super Vac VM16-BL-SP.

⚠WARNING *Read this manual before operating the ventilator.*

Save this guide for future reference.

CONTENTS

1. BREAKAGE OR DAMAGE DURING SHIPMENT 2
2. GENERAL DESCRIPTION AND SPECIFICATIONS 3
3. PRODUCT SAFETY PRECAUTIONS 3
4. BEFORE OPERATING VENTILATOR 4
5. OPERATION 5
6. CHARGING THE BATTERY PACKS 6
7. MAINTENANCE AND REPAIR 6
8. WARRANTY 7
9. CONTACT INFORMATION 8
10. PARTS AND EXPLODED VIEWS 9
    - 10.1 FAN ASSEMBLY 10
    - 10.2 FRAME ASSEMBLY 11
    - 10.3 TOP BOX ASSEMBLY 12
    - 10.4 POWER SUPPLY ASSEMBLY 13
    - 10.5 CONTROL BOX ASSEMBLY 14
    - 10.6 BATTERY BOX ASSEMBLY 15

1. Breakage or Damage During Shipment

The transportation company is fully responsible for all shipping damage and will resolve problems promptly if you handle it correctly. Please read these instructions carefully.

Examine the contents of all shipping cases. If you find any damage, call your transportation agent at once and have them make a description on the freight or express bill describing the damage and the number of pieces. Then write us and we will send you the original bill of lading. Get a claim blank from the express or truck company. Fill the claim form out. Attach the claim blank to the original bill of lading together with a copy of our invoice. Attach a memo on which you show the value of the damaged goods. Mail or hand these papers to your local transportation agent. They will process your claim with reasonable promptness.

Please note, we cannot and will not enter claims for damages. If we filed a claim here, it would be sent to your local freight agent for verification and investigation. Time can be saved by filing the claim directly. Every consignee is on the ground floor and in contact with the local agent who inspects the damaged goods, and thus, each claim can be given individual attention.

Since our goods are packed to comply with the regulations of all railroad, truck, and express companies, we cannot allow deduction from any invoice because of any damage, however, be sure to file your claim promptly. Our goods are sold F.O.B. factory. We take receipt from the transportation company certifying that the goods were delivered to them in good order, and our responsibility ceases.

It is seldom that any breakage or damage occurs in any of our shipments, and in no case will the customer be out any expense if they follow the above instructions.

Be sure to keep all damaged goods subject to examination of the truck or express company inspector, who may call on you some time later. These damaged goods, of course, will belong to them, and they will inform you what to do with them. If you dispose of these damaged goods, your claim may not be paid.

2. General Description and Specifications

Super Vac ventilators are specifically designed to provide a convenient and portable source of air ventilation. Super Vac positive pressure ventilators are tested to AMCA Standard 240-22, for use in extreme conditions.

Model #	Motor	H x W x D	Weight*
VM16-BL-SP	2 HP, 1.5 kW Brushless Variable Speed DC with Standard 120-240V AC, 50/60Hz	24.25 x 23.75 x 12.25 *615mm x 605mm x 310mm*	51 lbs *23 kg.*

**Weight without batteries. Specifications are subject to change without notification. Refer to model decal affixed to ventilator to determine actual specifications.*

This ventilator is designed for high powered air movement. Each blade is dynamically balanced for high efficiency and long life.

3. Product Safety Precautions ⚠WARNING

- Do not use the ventilator for purposes other than it's intended use.
- Wear eye and ear protection when operating the ventilator.
- Never operate ventilator while fatigued.
- Do not disassemble or modify the ventilator in any way. Doing so may lead to mechanical failure or personal injury.
- Do not wear loose clothing that could become entangled in the operating ventilator.
- Never permit anyone to operate ventilator without proper instruction.
- Do not operate ventilator without proper inlet or outlet guards in place. If guards are missing or damaged, contact factory for replacements.
- Do not place fingers or other foreign objects through inlet or outlet guards. Should a foreign object enter the ventilator, immediately stop motor. Be certain all mechanical motion has stopped. Do not use with any power voltage other than the indicated voltage.
- Never handle energized power cords with wet hands.
- Do not place or operate ventilator on unsteady tables, slanted surfaces or other unstable surfaces. Never use this ventilator in any explosive environment.
- Never let extension cords or plug connections lay in water. Locate the ventilator so that it cannot fall into water inadvertently.
- Never store or carry the battery pack so that metal objects can contact exposed battery terminals. Transporting batteries can possibly cause fires if the battery terminals contact loose nails, screws, keys, hand tools and the like.

Sound Level (on high-speed setting)

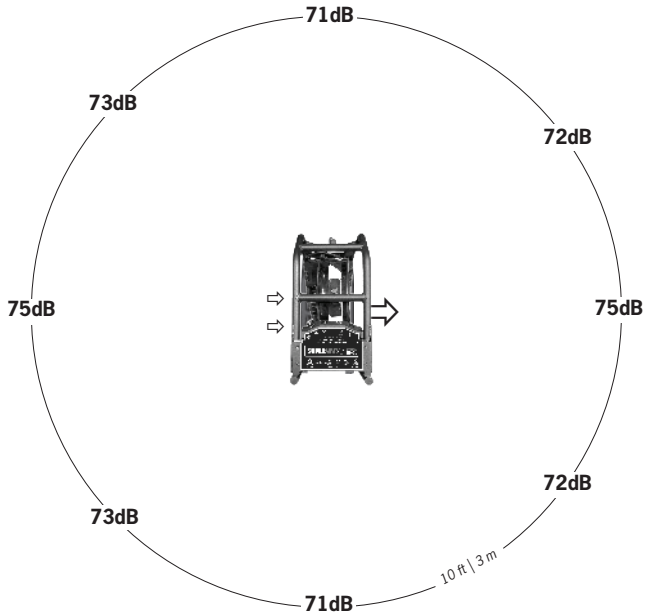

4. Before Operating Ventilator

- This ventilator will work with any M18 battery from the Milwaukee brand.
- **CAUTION** A complete inspection of the ventilator should be made prior to operation.
  - Check all threaded fasteners for proper tightness.
  - Check ventilator inlet and outlet guards for obstructions. Check and remove from immediate surrounding area any objects that could be drawn into the ventilator intake.
  - Replace damaged or missing guards before operating ventilator.
- Never store or carry the battery pack so that metal objects can contact exposed battery terminals. Transporting batteries can possibly cause fires if the battery terminals contact loose nails, screws, keys, hand tools and the like.
- **CAUTION** If using shore or mains power:
  - o Never use power cords with frayed, cut, or brittle insulation.
  - o Inspect power cord plug for proper connections to the ground fault interrupter circuit.

Airflow vs Setback

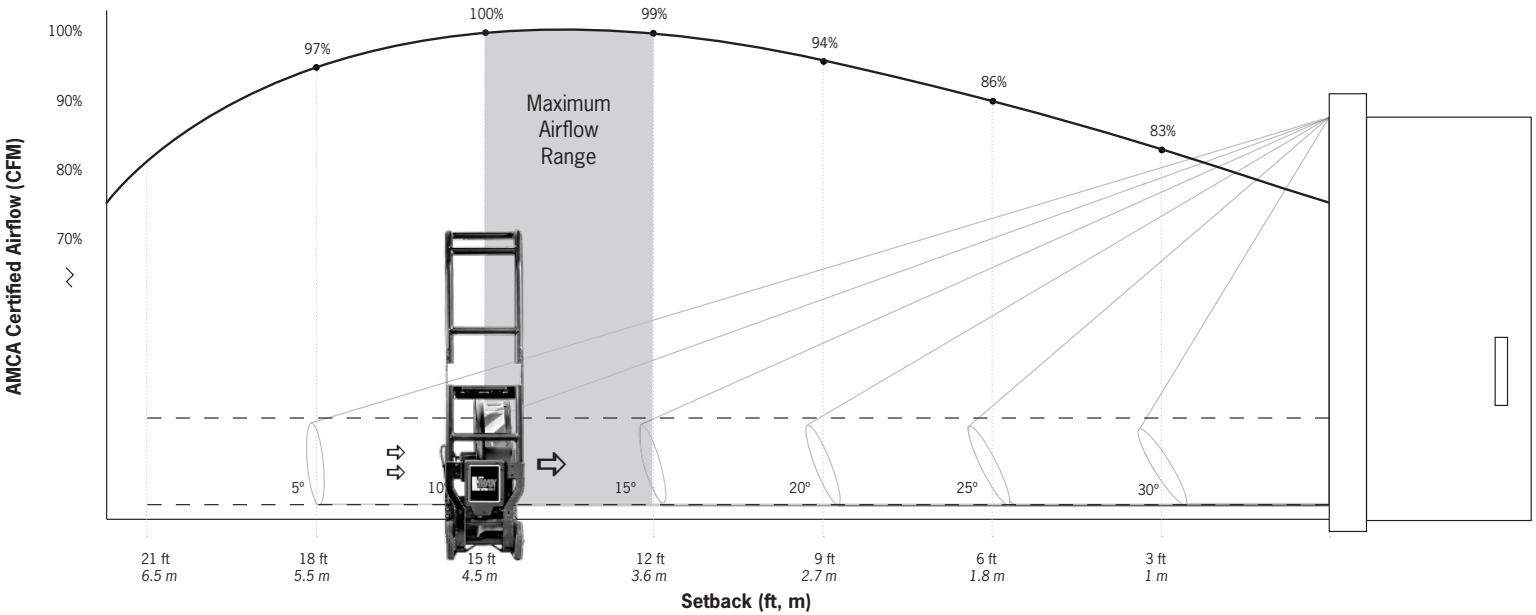

The Air Movement and Control Association International Inc. (AMCA) is a not-for-profit international association of the world's leading manufacturers of air system equipment. Super Vac ventilators have been tested through this third-party organization for more than 30 years in order to provide our customers confidence that our airflow values are correctly measured and advertised. In order to view all AMCA Certified Products according to ANSI/AMCA Standard 240-22, follow this link amca.org/certified-listed/license-type.html?c=1230&g=10008#positive-pressure-ventilator. For more info on AMCA 240-22 visit supervac.com/amca-certified-fans.

5. Operation

- ⚠WARNING Use caution not to direct toxic fumes into confined spaces with the ventilator.
- Insert two Milwaukee M18 batteries until they click. Both batteries are required for operation.
- Battery removal will get easier with more removal and replacement cycles. The Battery Adapter & M18 Battery interface is required by Milwaukee.
- Fan will need to be reset (turned off & on) if a new battery is inserted.
    - If fan is not reset, then the fan will not recognize the new battery and run until previous battery is empty.
- If using shore (mains) power, use an extension cord to connect to 110 – 240V AC, 50/60 Hz.
- Press and hold the power button until blue backlight indicates powering up.
- When the fan is on, it will need to run at the minimum speed allowed by Milwaukee. (This feature is to protect the batteries from small parasitic draws)
- Turn speed control clockwise until desired speed is reached.
- Power button will indicate approximate power left. (It is normal for colors to flicker back and forth if 2 batteries are being used)
    - Green: 100 - 50%
    - Yellow: 50 - 10%
    - Red: 10 - 0% (Low Battery Warning: Front Facing LED will also flash if turned on)
- To turn off, press and hold power button until blue backlight shows.

Battery Run Times at High Speed and Max Mode

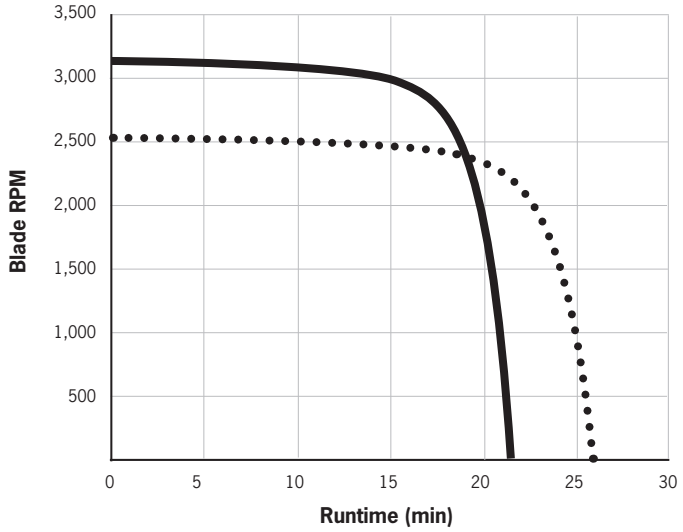

(2) FORGE 12.0Ah Runtime Test

••• High Speed ▬ Max Mode

- Runtime is dependent on air density, and battery condition.
- Test data shown with new batteries, taken in our factory in Colorado at 5,000 ft. elevation (1,500 meters), temperature 60°F - 72ºF (16-22º C), humidity 15-35%, pressure 1,000-1,030 mb.
- Air density is primarily affected by elevation, humidity and temperature.
- At temperatures below freezing expect battery life to decrease.
- Other M18 Batteries will operate the fan, but at reduced runtimes.

6. Charging the Battery Packs

- Remove Milwaukee batteries from fan.
- ⚠CAUTION Insert in Milwaukee Charger. Use only Milwaukee brand battery chargers.
- When the battery pack temperature is outside the charging range (40-105ºF or 5-40ºC), the red light on the charger will flash and the battery will not charge.
- Once the battery pack is within the acceptable temperature range, normal charging will take place.
- Using the Milwaukee SuperCharger™, a FORGE 12 Amp hour battery will recharge in 45 minutes and an FORGE 8 Amp hour battery will recharge in 35 minutes.
- Other Milwaukee chargers, including units that work with vehicle DC power, may take longer to fully charge the batteries.

⚠CAUTION

- Do not store battery packs or chargers above 120ºF (50ºC) or in direct sunlight.
- Never use/store chargers or batteries in explosive atmospheres.
- Never attempt to open the battery pack. If cracked or damaged, return it to a service center for recycling.
- Do not splash or immerse charger in water or other liquids.

7. Maintenance and Repair

⚠CAUTION Maintenance should only be performed by an experienced and trained personnel. If you have any questions, contact Super Vac before attempting any maintenance at info@supervac.com or 1-800-525-5224.

⚠WARNING Be sure the ventilator is disconnected from the power source and both batteries have been removed before performing any maintenance or repair.

To-Do Checklists:

Daily/After Each Use:

- Charge batteries completely
- Check that Guards are undamaged and effectively prevent objects from contacting the blade
- Wheels and feet are in place and tight
- Tilt Mechanism works properly
  - If tilt adjust is too loose, tighten knurled nut on the Tilt Mechanism.
  - For larger adjustments, tighten nut with 9/16 (14mm) wrench.

Weekly/Monthly/Quarterly:

- Calibrate Battery
  - Fully charging, then fully discharging, and fully charging once again before storage
  - Replace battery (-ies) if battery shows signs of damage from dropping or excessive heat
- Check for loose fasteners
- Check condition of the power cord (if purchased with Shore Power) (14mm) wrench.

Yearly:

- Battery Condition
  - Check runtime in low wind and average temperature conditions
  - If runtime is below 75% of advertised runtime, replacing batteries is recommended
- Excessive vibration
  - Blade imbalance due to accumulation of dirt on blade
- Check Blade interference
  - Remove front guard and rotate manually to check for interference

8. Warranty

Milwaukee products carry a separate 3-year limited warranty for the compatible battery packs, chargers and ODM battery adapter. For more information contact them at www.milwaukeetool.com or 1-800-729-3878.

Super Vacuum Manufacturing Company warrants that the equipment is free from defects in materials and workmanship when used and operated for a period of five years, excluding the motor and electronics which has a 3-year warranty. The responsibility of Super Vacuum Manufacturing Company under this limited warranty is limited to the repair and replacement of any parts which are found defective and which are returned to Super Vacuum Manufacturing Company at 3842 Redman Dr, Fort Collins, CO 80524 with transportation charges prepaid (C.O.D. shipments will not be accepted).

Prior to returning defective parts to SUPER VACUUM MANUFACTURING COMPANY, the original purchaser shall make a claim in writing to SUPER VACUUM MANUFACTURING COMPANY at the above address indicating the model number and type of defect. No parts or equipment will be received by SUPER VACUUM MANUFACTURING COMPANY for repair or replacement under this warranty without specific written authority from it in advance.

Any parts damaged by improper installation, overloading, abuse or accident of any type or cause are not covered by this warranty.
All equipment manufactured by us is pre-run and tested before leaving our plant and is shipped in good working order and condition. We therefore extend to the original purchasers the following Limited Warranty for the period of five years from the original date of purchase:

1. This warranty does not apply to defects caused by accident, misuse, neglect, or wear and tear, nor can we be held responsible for incidental and consequential expense and loss, nor does this warranty apply to equipment where alterations have been executed without our knowledge or consent. These conditions are readily discernible when the equipment is returned to us for inspection.
2. On all component parts not manufactured by SUPER VACUUM MANUFACTURING COMPANY, their warranty is to the extent that the manufacturer of such component warrants them to SUPER VACUUM MANUFACTURING COMPANY, if at all. Look in your local business phone directory for the nearest repair station for the brand of parts you have or write to us for the address.
3. If equipment received is found to have been damaged in transit, a claim should be made against the carrier within three days, as we assume no responsibility for such damage.
4. Any service other than our Authorized Service voids this warranty.
5. This warranty is in lieu of and is intended to exclude all other warranties, express or implied, oral or written, including any warranties of MERCHANTABILITY or FITNESS for a particular purpose.

9. Contact

For parts or service information, contact:

Super Vacuum Manufacturing Company, Inc.
3842 Redman Dr.
Fort Collins, CO 80524

Phone: 800-525-5224
970-297-7100

Fax: 970-297-7099

Email : info@supervac.com
Internet: www.supervac.com

10. Parts and Exploded Views

PARTS AND EXPLODED VIEWS

10.1 Fan Assembly [Part 010-16079]

Parts List

ITEM	QTY	PART NUMBER	DESCRIPTION
1	1	010-16099	ASSEMBLY, FRAME, VM16-BZ
2	1	010-22099	ASSEMBLY, VMXX-BL
3	1	010-14096	ASSEMBLY, POWER SUPPLY, 36V, VMXX-BZ
4	1	021-10535	MOTOR, HEI, BLDC, 36V
5	1	005-18011	SEAL, CONTA-CLIP - 2MM
6	2	005-18013	SEAL, CONTA-CLIP - 2x5MM
7	3	005-18017	SEAL, CONTA-CLIP - 9-10 mm

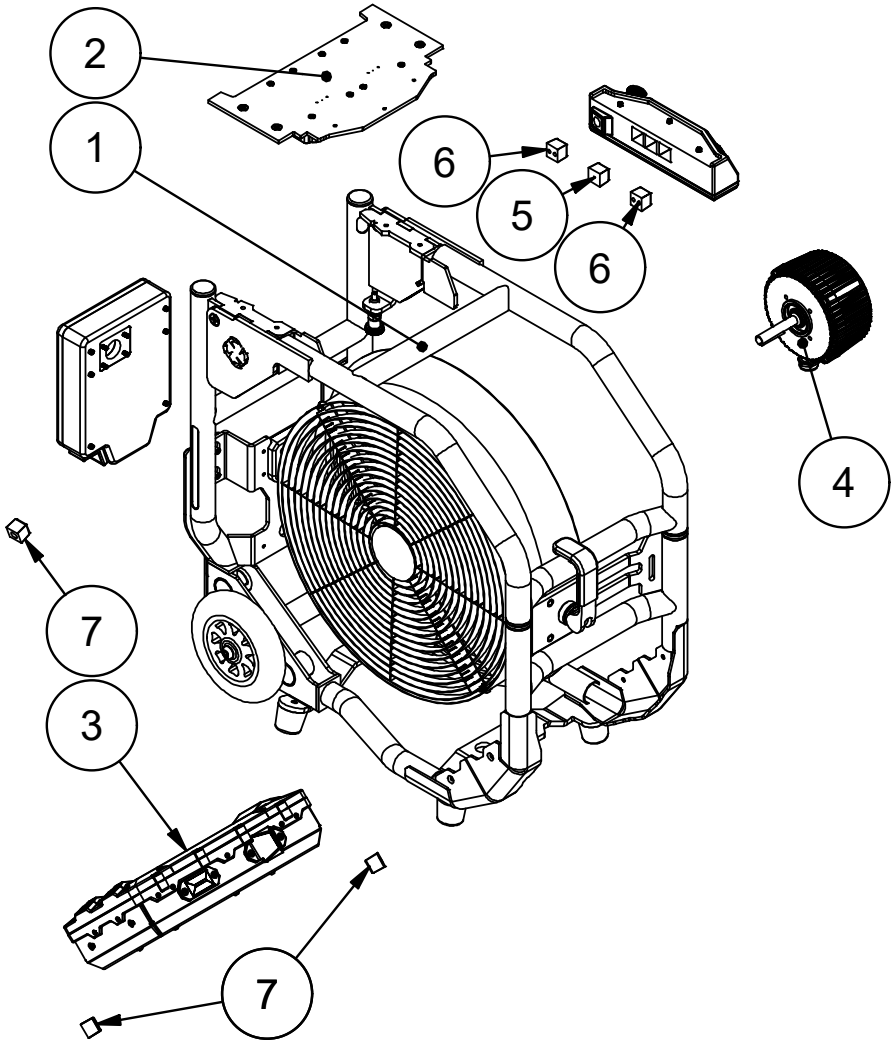

10.2 Frame Assembly [Part 010-16099]

Parts List

ITEM	QTY	PART NUMBER	DESCRIPTION
1	1	010-16089	FRAME WLDMENT, VM16-BZ
2	1	010-16086	WLDMNT HANDLE, V16-BZ
3	1	010-14097	ASM, BOX, CONTROLLER, VMXX-BZ
4	1	010-14095	ASM, TOP BOX, VMXX-BZ
5	1	010-16098	ASM, SHROUD, VM16-BZ
6	1	005-18026	SEAL, SLEEVE MOUNT, VXX-BX
7	1	010-23011	ASM, PLASTIC SLEEVE MOUNT, VM16-BZ
8	1	005-10270	WASHER, RUBBER, ROTATION, V1X-BX
9	4	024-00011	FEET RUBBER CONE SHAPE, MET, VXX-BXM
10	6	005-10256	PLUG, 1.25, TUBE END ROUND, VALOR
11	2	008-43804	WHEEL, V1X-BX, 6 INCH
12	1	019-40588	ASM, AXLE TUBE, VMXX-BZ
13	2	019-20455	PLASTIC STAIR SKID, V16X-BX
14	1	005-00001	T-HANDLE, PLUNGER, METRIC, VALOR
15	1	005-13563	LIGHT, LED, V1X-BX
16	1	019-40551	HANDLE, CAM LOCK ASSY, VXX-BZ
17	1	COMMERCIAL	NUT, M10X1.5 ANSI M, NYLOC, SS
18	2	COMMERCIAL	WASHER, PLASTIC, M8
19	2	COMMERCIAL	BHCS, M10X1.5 X 60mm
20	2	COMMERCIAL	PPMS, M5X0.8 X 16mm
21	6	COMMERCIAL	PFMS, M5X0.8 X 16mm
22	8	COMMERCIAL	NUTSERT, M5X0.8 mm
23	2	COMMERCIAL	NUT NYLOC, M8X1.25
24	2	COMMERCIAL	PFMS, M8X1.25 X 25mm

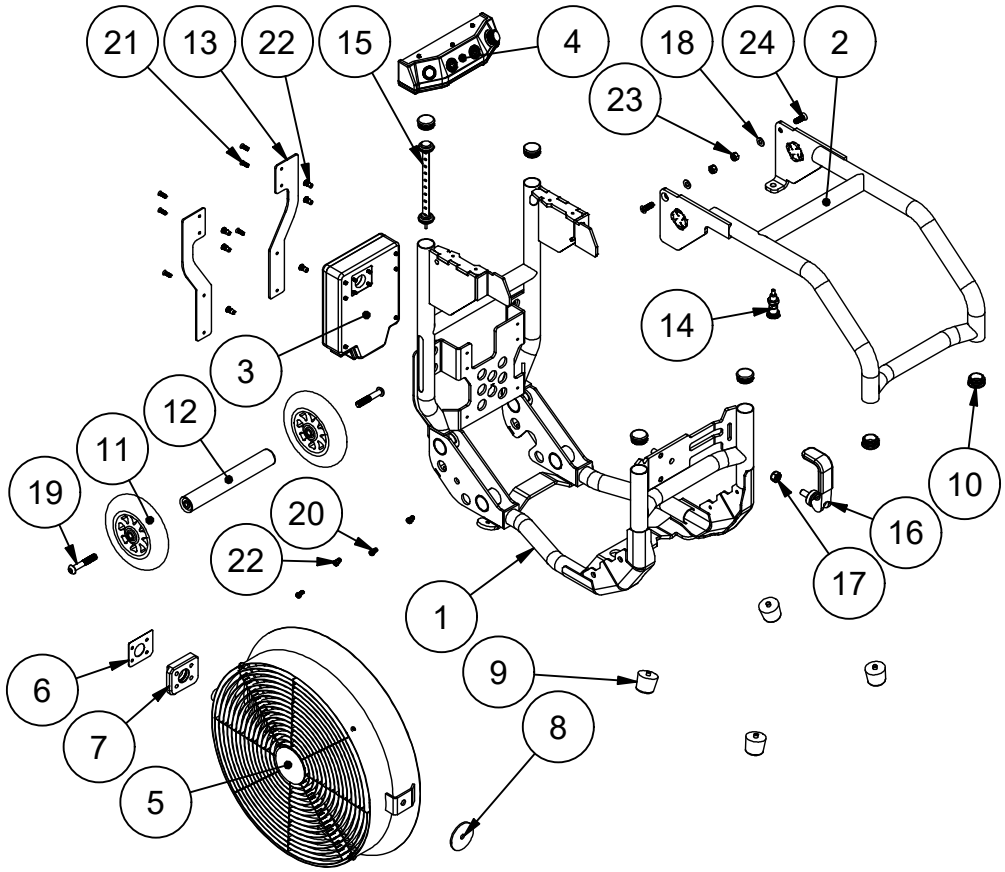

10.3 Electrical Top Box Assembly [Part 10-14095]

Parts List

ITEM	QTY	PART NUMBER	DESCRIPTION
1	1	010-23005	ASM, ELECTRICAL TOP BOX, VMXX-BZ
2	1	005-40021	3D, ELECTRICAL TOP BOX, COVER, VMXX-BZ
3	1	005-40022	SEAL, ELECTRICAL TOP BOX, VXX-BZ
4	1	005-13562	SWITCH, MOMENTARY, RGB, V1X-BX
5	1	005-13564	SWITCH, LATCHING, V1X-BX
6	1	005-40200	SWITCH, MAX, VMXX-BZ
7	1	005-40268	POTENTIOMETER, MET, VXX-BX/ VMXX-BZ
8	1	005-40269	KNOB, POTENTIOMETER, VMXX-BZ
9	1	005-18019	SEAL, CONTA-CLIP - 13mm
10	3	COMMERCIAL	BHCS, M5X0.8 X 10mm
11	7	COMMERCIAL	SHCS, M4X0.7 X 12mm

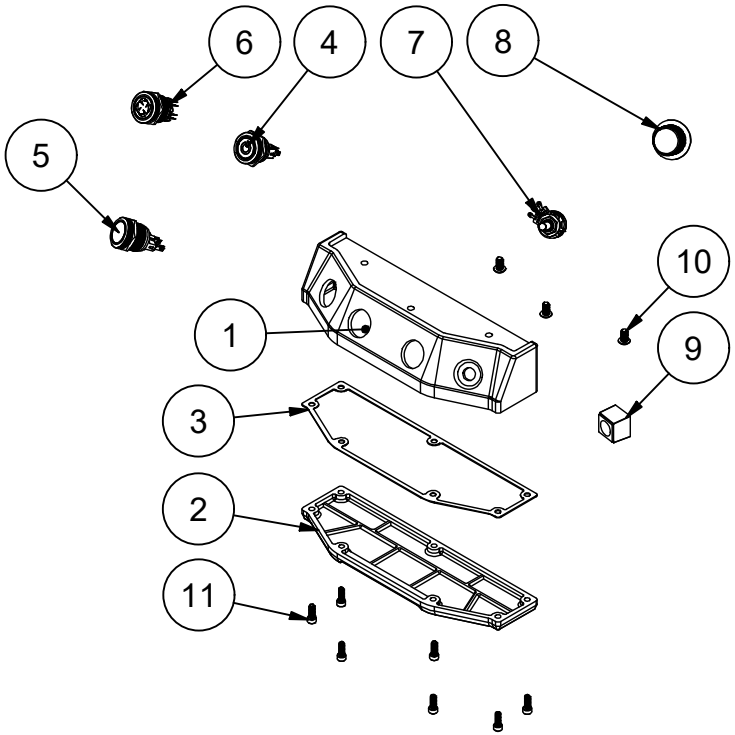

10.4 Power Supply Assembly - 36V [Part 010-14096]

Parts List

ITEM	QTY	PART NUMBER	DESCRIPTION
1	1	010-23020	ASM, PWR SUPPLY BOX, RING, VMXX-BZ
2	1	005-40036	3D, PWR SUPPLY CVR, BACK, CRNR, VXX-BZ
3	1	005-40035	3D, PWR SUPPLY CVR, FRONT, CRNR, VXX-BZ
4	2	010-23021	ASM, PWR SUPPLY CVR, BRIDGE, VMXX-BZ
5	1	005-40039	PLATE, PWR SUPPLY HEAT SINK, VXX-BZ
6	2	005-40033	3D, PWR SUPPLY CORD PASS, VXX-BZ
7	1	005-40032	3D, PWR SUPPLY, BLANK COVER, VXX-BZ
8	3	005-40031	SEAL, PWR SUPPLY CORD HOLE, VXX-BZ
9	1	005-40040	SEAL, PWR SUPPLY RING TO BOX, VXX-BZ
10	1	005-40041	SEAL, PWR SUPPLY CVR TO RING, VXX-BZ
11	4	005-14200	SEAL, GORETEX VENT, M12X1.5
12	4	005-14201	SEAL, GORETEX VENT, NUT, M12X1.5
13	1	005-40038	PLATE,VXX-BZ PWR SUPPLY BOX
14	1	005-15360	POWER SUPPLY, 36V
15	4	COMMERCIAL	BHCS, M4X0.7 X 6mm
16	4	COMMERCIAL	PFMS, M4X0.7 X 12mm
17	13	COMMERCIAL	SHCS, M4X0.7 X 12mm
18	14	COMMERCIAL	PFMS, M3X0.5 X 8mm
19	6	COMMERCIAL	PFMS, M4X0.7 X 8mm
20	4	COMMERCIAL	PFMS, M5X0.8 X 10mm

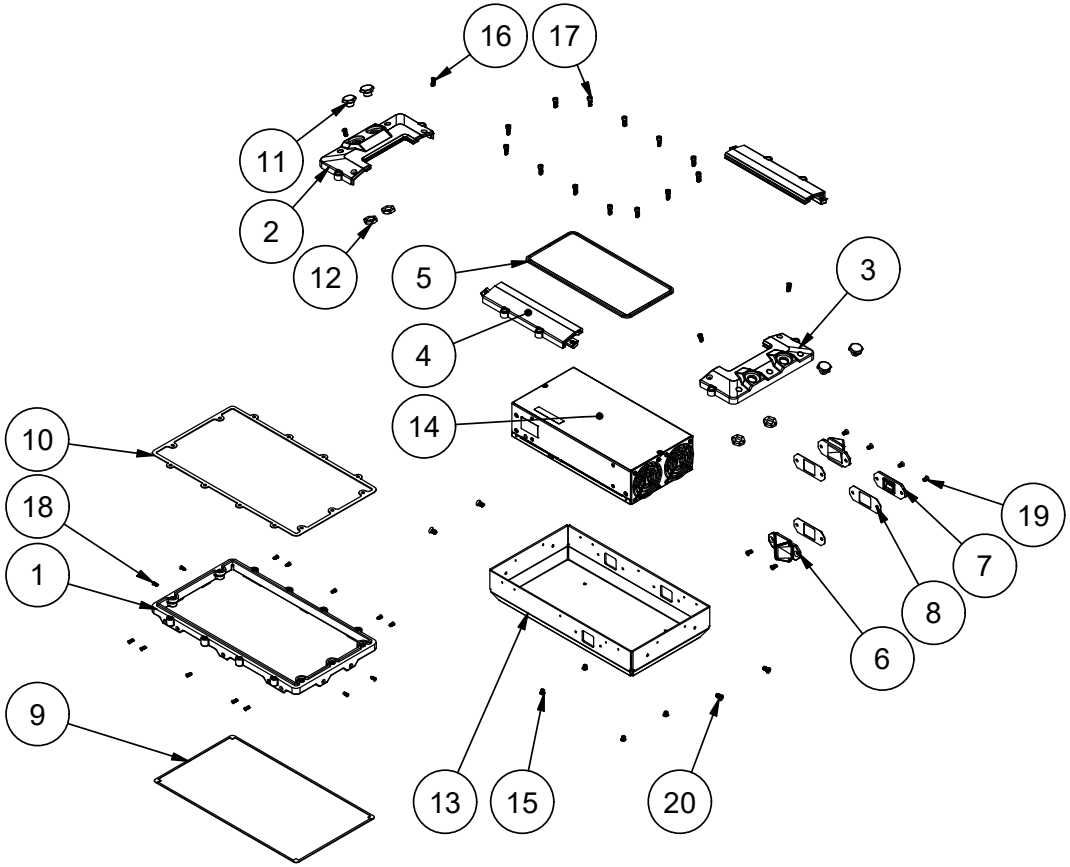

10.5 Control Box Assembly - [Part 010-14097]

Parts List

ITEM	QTY	PART NUMBER	DESCRIPTION
1	1	010-23010	ASM BOX CONTROLLER, VMXX-BZ
2	1	005-40001	BOX CONTROLLER COVER, VXX-BX
3	1	005-18021	BOX CONTROLLER GASKET, VXX-BX
4	1	021-40000	CONTROLLER, MAIN BOARD, BLDC
5	1	005-18053	PLASTIC, SLEEVE LOCK, VXX-BX
6	1	005-18012	SEAL, CONTA-CLIP - 5MM
7	1	005-18019	SEAL, CONTA-CLIP - 13mm
8	11	COMMERCIAL	SHCS, M4X0.7 X 14mm
9	6	COMMERCIAL	SHCS, M5X0.8 X 10mm
10	8	COMMERCIAL	PPMS, M3X0.5 X 6mm

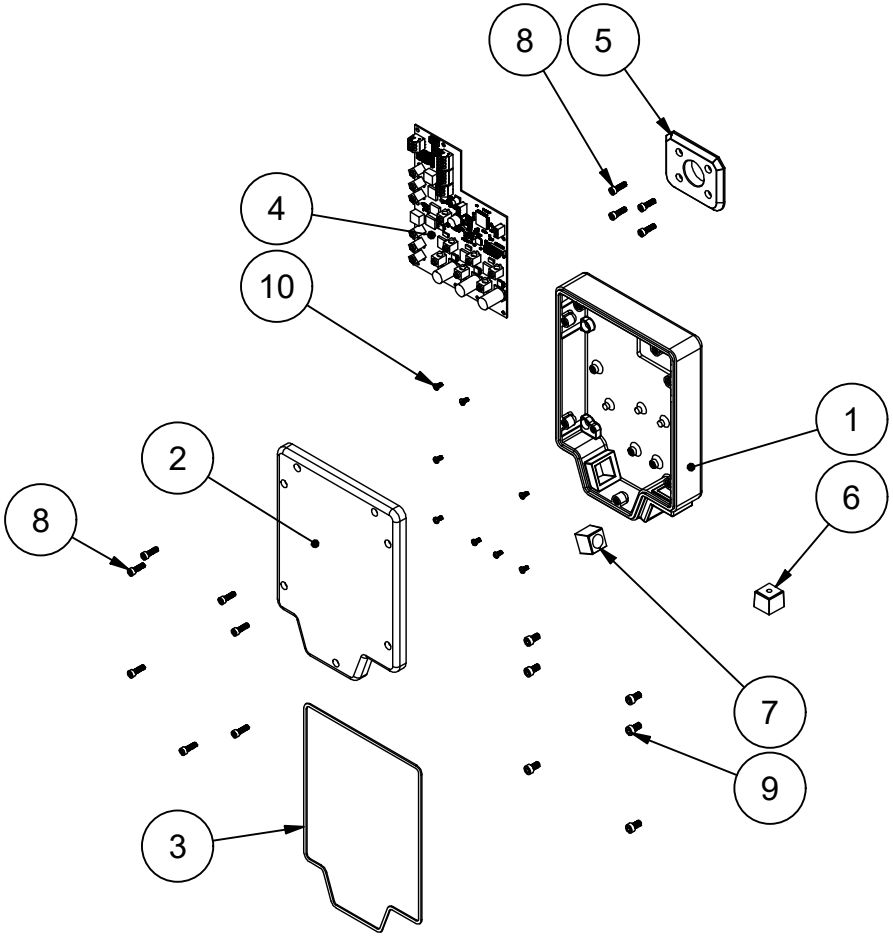

10.6 Battery Box Assembly - [Part 010-22099]

Parts List
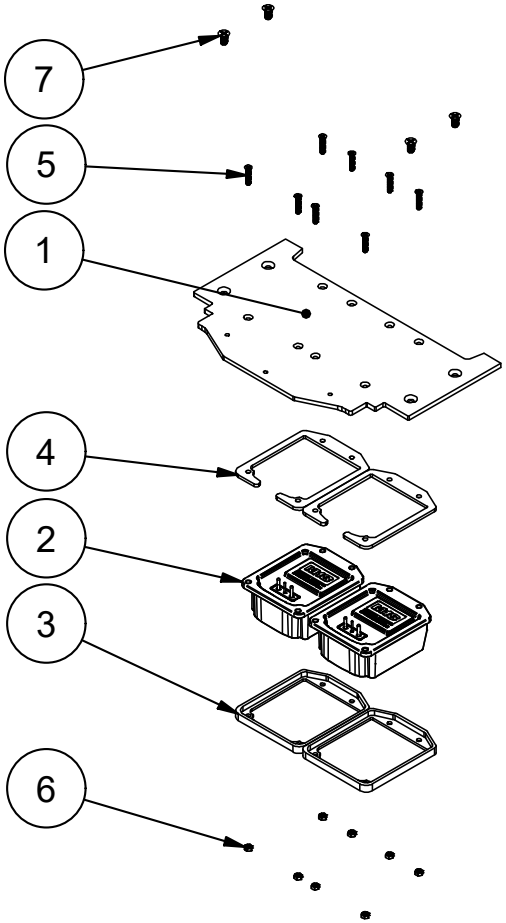
ITEM	QTY	PART NUMBER	DESCRIPTION
1	1	019-40510	PLATE, TOP VMXX-BZ
2	2	005-16103	ADAPTER, MILWAUKEE, ODM
3	2	005-18054	BATTERY ADAPTER, M18, LOWER, SINGLE
4	2	005-18055	MILWAUKEE_BATTERY_MOUNT_SPACER
5	8	COMMERCIAL	PFMS, M4X0.7 X 20mm
6	8	COMMERCIAL	HEX NUT, M4X0.7 mm
7	4	COMMERCIAL	PFMS, M6X1.0 X 12mm