READ THIS FIRST

VENTILATOR USER GUIDE **MODEL F164E**

SUPER VAC
THE VENTILATION SPECIALISTS

DANGER

PERSONAL RESPONSIBILITY CODE

The member companies of FEMSA that provide emergency response equipment and services want responders to know and understand the following:

1. Firefighting and Emergency Response are inherently dangerous activities requiring proper training in their hazards and the use of extreme caution at all times.
2. It is your responsibility to read and understand any user's instructions, including purpose and limitations, provided with any piece of equipment you may be called upon to use.
3. It is your responsibility to know that you have been properly trained in Firefighting and/or Emergency Response and in the use, precautions, and care of any equipment you may be called upon to use.
4. It is your responsibility to be in proper physical condition and to maintain the personal skill level required to operate any equipment you may be called upon to use.
5. It is your responsibility to know that your equipment is in operable condition and has been maintained in accordance with the manufacturer's instructions.
6. Failure to follow these guidelines may result in death, burns or other severe injury.

FEMSA

Fire and Emergency Manufacturers and Services Association, Inc.
P.O. Box 147, Lynnfield , MA 01940 www.FEMSA.org

Copyright 2006 FEMSA. All Rights Reserved

USER GUIDE

This manual covers the description, cautions, operation and maintenance of *Super Vac* explosion proof electric ventilators.

⚠WARNING Read this manual before operating the ventilator.
Save this guide for future reference.

CONTENTS

1. Breakage or Damage During Shipment 2
2. General Description and Specifications 3
3. Product Safety Precautions 4
4. Before Operating Ventilator 4
5. Operation 5
6. Maintenance and Repair 5
7. Troubleshooting Motor Overheating Problems 6
8. Extension Cords 7
9. Extension Ducts 7
10. Warranty 8
11. Contact Information 9
12. Parts List 10
13. Exploded View 11

1. Breakage or Damage During Shipment

The transportation company is fully responsible for all shipping damage and will resolve problems promptly if you handle it correctly. Please read these instructions carefully.

Examine the contents of all shipping cases. If you find any damage, call your transportation agent at once and have them make a description on the freight or express bill describing the damage and the number of pieces. Then write us and we will send you the original bill of lading. Get a claim blank from the express or truck company. Fill the claim form out. Attach the claim blank to the original bill of lading together with a copy of our invoice. Attach a memo on which you show the value of the damaged goods. Mail or hand these papers to your local transportation agent. They will process your claim with reasonable promptness.

Please note, we cannot and will not enter claims for damages. If we filed claim here, it would be sent to your local freight agent for verification and investigation. This time can be saved by your filing the claim directly. Every consignee is on the ground floor and in contact with the local agent who inspects the damaged goods, and thus, each claim can be given individual attention.

Since our goods are packed to comply with the regulations of all railroad, truck, and express companies, we cannot allow deduction from any invoice because of any damage, however, be sure to file your claim promptly. Our goods are sold F.O.B. factory. We take receipt from the transportation company certifying that the goods were delivered to them in good order, and our responsibility ceases.

It is seldom that any breakage or damage occurs in any of our shipments, and in no case will the customer be out any expense if they follow the above instructions.

Be sure to keep all damaged goods subject to examination of the truck or express company inspector, who may call on you some time later. These damaged goods, of course, will belong to them, and they will inform you what to do with them. If you dispose of these damaged goods, your claim may not be paid.

2. General Description and Specifications

Super Vac ventilators are specifically designed to provide a convenient and portable source of fresh air. Refer to decal affixed to ventilator to determine proper operating voltage requirements. *Super Vac* electric ventilators are single speed, fresh air ventilators, for use in extreme conditions.

Specifications[1]

[1] Specifications are subject to change without notification. Refer to model decal affixed to ventilator to determine actual specifications.

[2] EXP = Explosion proof motor, Class 1 group D, Class 2 Group E;F;G

This ventilator is designed for high powered air movement. *Super Vac*'s patented propeller produces a greater intake of air and eliminates turbulence at the tips. The high velocity screw action sweeps air back over the motor, enabling it to run cooler. The patented 4-Blade propeller is cast from aluminum alloy. Each blade is statically balanced for high efficiency and long life. Explosion proof motors are U.L. rated, not the entire ventilator assembly.

All *Super Vac* ventilators are designed to accept optional spiral duct and adapters. Placing adapter and ducts on the output side provides positive pressure ventilation. Place adapter and duct on the input side for negative pressure ventilation.

The square housing design gives the unit added strength and stability. Handles on each corner makes the ventilator easy to hang on windows, doorways or ladders. Multiple units may be stacked using optionally available accessories.

3. Product Safety Precautions ⚠WARNING

- Do not use the ventilator for purposes other than its' intended use.
- Do not disassemble or modify the ventilator in any way. Doing so may lead to mechanical failure or personal injury.
- Do not wear loose clothing that could become entangled in the operating ventilator.
- Do not operate ventilator without proper inlet or outlet guards in place. If guards are missing or damaged, contact factory for replacements.
- Do not place fingers or other foreign objects through inlet or outlet guards. Should a foreign object enter the ventilator, immediately disconnect power source. Be certain all mechanical motion has stopped before removing foreign object.
- Do not use with any power voltage other than the indicated voltage.
- Do not place or operate ventilator on unsteady tables, slanted surfaces or other unstable surfaces.
- Never handle energized power cords with wet hands.
- Never let extension cords or plug connection lay in water. Locate the ventilator so that it cannot fall into water inadvertently.

4. Before Operating Ventilator ⚠CAUTION

- Always operate this ventilator from a proper AC power source supplied through a ground fault interrupter receptacle. Test receptacle for ground fault before plugging in the ventilator power cord.
- A complete inspection of the ventilator should be made prior to operation.
- Never use power cords with frayed, cut, or brittle insulation.
- Inspect power cord plug for sound connections to the ground fault interrupter circuit.
- Check all threaded fasteners for proper tightness.
- Inspect inlet and outlet guards for damage or missing pieces. Replace damaged or missing guards before operating ventilator.

5. Operation ⚠CAUTION

Check ventilator inlet and outlet guards for obstructions. Check and remove from immediate surrounding area any objects that could be drawn into the ventilator intake.

Place ventilator in desired location before connecting to power supply.

⚠WARNING Extend and place any flexible duct as required. Use caution not to direct toxic fumes into confined spaces with the ventilator. Please refer to the ***Super Vac Training Manual for Smoke Ventilation*** for comprehensive instruction on effective ventilation practices.

Insert power cord plug into AC power receptacle. Pull out switch rod to begin ventilation.

To stop ventilation push in switch rod, remove power cord plug from AC power receptacle.

6. Maintenance and Repair

Maintenance should only be performed by experienced and trained personnel.

Be sure the ventilator is disconnected from the power source before performing any maintenance or repair.

The motor is of heavy duty ball bearing construction. The unit is completely sealed and requires no lubrication for the life of the motor.

The ventilator blade should be specially checked for build-up of material or dirt which may cause an imbalance. Excessive imbalance can lead to accelerated wear on motor bearings and vibration. Remove ventilator guards. Clean blade and inside housing with mild detergent and water. Do not use abrasives, sharp instruments or caustic solvents that may scratch or damage the aluminum alloy blade..

Intake and exhaust guards are not interchangeable. When replacing guards after cleaning, position them with the rings to the outside with the row of spot welds holding the rings on the bottom.

7. Troubleshooting Motor Overheating Problems

⚠CAUTION: Motors are equipped with thermal overload protection. When internal motor temperature exceeds design limits, the motor will automatically shut off. Motor will automatically restart when it cools sufficiently after overheating. Remove power cord plug from AC receptacle before examining or working on a motor which has stopped because of overheating. Thermal overload protection sensitivity increases with frequency. Take preventative steps to correct cause of overheating to assure long motor life. Most overheating problems are associated with the use of portable power generators as the ventilator power supply.

Common causes of motor overheating:

- Power generator not providing constant voltage. Ventilators are equipped with AC motors designed to operate on power that falls between ±3% of design specifications.
- Using too small gauge of extension cord.
- Exceeding maximum length extension cord.
- Insufficient unobstructed distance on exhaust side of ventilator. Please refer to the ***Super Vac Training Manual for Smoke Ventilation*** for recommended ventilator placement.
- Insufficient wattage generator. When running multiple ventilators on one generator, plug ventilators in one at a time. Wait until first ventilator is running at full speed before connecting next ventilator to generator. Do not exceed generator capacity.
- Using accessory ducting of too small a diameter or excessive length.
- Incorrect amperage circuit breaker for circuit load
- Using reeled or coiled extension cords.

8. Extension Cords

Do not use reeled or coiled cable. Reeled or coiled cable can produce a counter EMF (electromotive force). The counter EMF can reduce the current carrying capability of an extension cord. This counter EMF will result in a voltage drop within the motor instigating a thermal overload condition. Power supply must handle wattage requirements. When conditions require the use of reeled cable, unreel all cable and place on the ground in very loose overlapping non-uniform coils.

Units[1]	WATTS[2]	Minimum Wire Gauge	Maximum Cable Length (feet)
1	2000	14	150
2	4000	12	250
3	6000	10	350

[1] Multiple units powered by one extension cord.
[2] Minimum running wattage for multiple units. Startup amperage draw is much higher.

9. Extension Ducts

Spiral duct may be used on the intake or exhaust side of a ventilator.

Exhaust Side[1]	Maximum 40 feet
Intake Side[1]	Maximum 20 feet
"L" Duct[1]	Exhaust side only

1 Adapter required, optional, not included with ventilator.

10. Warranty

Limited Warranty
Five Years

Super Vacuum Manufacturing Company warrants that the equipment is free from defects in materials and workmanship when used and operated for a period of five years. The responsibility of Super Vacuum Manufacturing Company under this limited warranty is limited to the repair and replacement of any parts which are found defective and which are returned to Super Vacuum Manufacturing Company at 3842 Redman Dr, Fort Collins, CO 80524 with transportation charges prepaid (C.O.D. shipments will not be accepted).

Prior to returning defective parts to SUPER VACUUM MANUFACTURING COMPANY, the original purchaser shall make a claim in writing to SUPER VACUUM MANUFACTURING COMPANY at the above address indicating the model number and type of defect. No parts or equipment will be received by SUPER VACUUM MANUFACTURING COMPANY for repair or replacement under this warranty without specific written authority from it in advance.

Any parts damaged by improper installation, overloading, abuse or accident of any type or cause are not covered by this warranty.

All equipment manufactured by us is pre-run and tested before leaving our plant, and is shipped in good working order and condition. We therefore extend to the original purchasers the following Limited Warranty for the period of five years from the original date of purchase:

1. This warranty does not apply to defects caused by accident, misuse, neglect, or wear and tear, nor can we be held responsible for incidental and consequential expense and loss, nor does this warranty apply to equipment where alterations have been executed without our knowledge or consent. These conditions are readily discernable when the equipment is returned to us for inspection.
2. On all component parts not manufactured by SUPER VACUUM MANUFACTURING COMPANY, their warranty is to the extent that the manufacturer of such component warrants them to SUPER VACUUM MANUFACTURING COMPANY, if at all. Look in your local business phone directory for the nearest repair station for the brand of parts you have or write to us for the address.
3. If equipment received is found to have been damaged in transit, a claim should be made against the carrier within three days, as we assume no responsibility for such damage.
4. Any service other than our Authorized Service voids this warranty.
5. This warranty is in lieu of and is intended to exclude all other warranties, express or implied, oral or written, including any warranties of MERCHANTIBILITY or FITNESS for a particular purpose.

11. Contact Information

For parts or service information, contact:

Super Vacuum Manufacturing Company, Inc.
3842 Redman Dr
Fort Collins, CO 80524

Phone: 1-800-525-5224
970-297-7100
FAX: 970-297-7099
Internet: www.supervac.com

SUPER VAC

THE VENTILATION SPECIALISTS

12. Parts List

1	012-10261	1	GUARD 16” STD. FRONT-FINISHED
2	034-12941	8	10-24 X 1/2" PHIL PH MS BLACK SS
3	032-10713	8	10-24 NYLOK SELF LOCK NUT ZINC
4	032-10759	1	1/4 – 20 LEFT HAND SCREW ZINC
5	032-10752	1	1/4” FLAT WASHER USS ZINC
6	032-10761	2	5/16 – 18 x 1/2” ALLEN SET SCREW
7	003-10040	1	BLADE 16” FOUR BLADE FINISHED
8	031-10658	1	MOTOR MOUNT CAP 16SE PAINTED
9	032-10768	2	5/16 – 18 X 3/4” HEX CS ZINC
10	032-10790	4	5/16-18 NYLOK HEX NUT ZINC
11	021-10488	1	MOTOR P164SE 1/3HP EXP 115/230VAC
12	024-10527	4	FEET #1409-W RECTANGULAR
13	032-10698	8	8-32 X 1/2” PHIL PH MS ZINC
14	032-10695	8	8-32 HEX NUT ZINC
15	018-13679	1	HOUSING 16” SE PAINTED
16	005-10134	1	HEYCO 8P-2 GROMMET
17	005-14099	1	CORD 12-3 SOW X 10’ MOLDED #93261-1
18	012-10262	1	GUARD 16” STD. REAR FINISHED
19	024-10521	1	SWITCH ROD 16”
20	024-10530	1	KNOB #2965HW BLACK W/ 1/4-20 INSERT
21	005-10144	1	GROMMET #230 SWITCH ROD
22	033-10867	1	3/32” X 1/2” COTTER PIN ZINC
23	017-10377	1	CORD POCKET FINISHED
24	035-11124	2	#6-4 RIVIT
25	025-13968	1	DECAL – HF164E CSV ELECTRIC
26	025-10545	1	DECAL – YELLOW PULL-ON
27	025-10548	1	DECAL – EXHAUST ARROW
28	008-15081	1	VENTILATOR USER GUIDE F164E
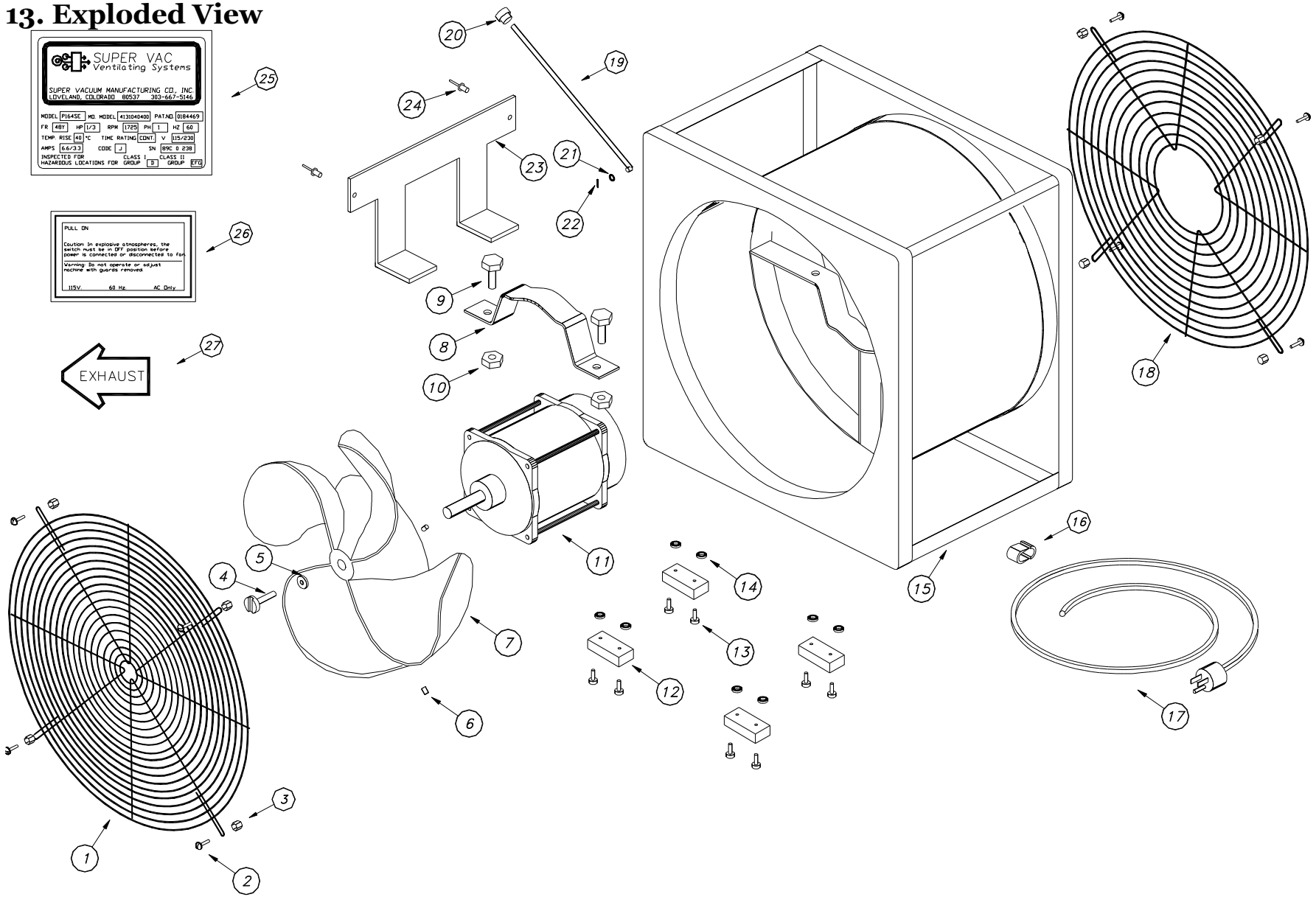
13. Exploded View