READ THIS FIRST

VENTILATOR USER GUIDE

MODEL V16-BD-WH

SUPERVAC

DANGER

PERSONAL RESPONSIBILITY CODE

The member companies of FEMSA that provide emergency response equipment and services want responders to know and understand the following:

1. Firefighting and Emergency Response are inherently dangerous activities requiring proper training in their hazards and the use of extreme caution at all times.
2. It is your responsibility to read and understand any user's instructions, including purpose and limitations, provided with any piece of equipment you may be called upon to use.
3. It is your responsibility to know that you have been properly trained in Firefighting and/or Emergency Response and in the use, precautions, and care of any equipment you may be called upon to use.
4. It is your responsibility to be in proper physical condition and to maintain the personal skill level required to operate any equipment you may be called upon to use.
5. It is your responsibility to know that your equipment is in operable condition and has been maintained in accordance with the manufacturer's instructions.
6. Failure to follow these guidelines may result in death, burns or other severe injury.

FEMSA

Fire and Emergency Manufacturers and Services Association, Inc.
P.O. Box 147, Lynnfield , MA 01940 www.FEMSA.org

Copyright 2006 FEMSA. All Rights Reserved

USER GUIDE

This manual covers the description, cautions, operation, and maintenance of the Super Vac V16-BD-WH.

⚠WARNING *Read this manual before operating the ventilator.*

Save this guide for future reference.

CONTENTS

1. BREAKAGE OR DAMAGE DURING SHIPMENT 2
2. GENERAL DESCRIPTION AND SPECIFICATIONS 3
3. PRODUCT SAFETY PRECAUTIONS 3
4. BEFORE OPERATING VENTILATOR 4
5. OPERATION 5
6. CHARGING THE BATTERY PACKS 6
7. MAINTENANCE AND REPAIR 6
8. WARRANTY 7
9. CONTACT INFORMATION 8
10. BEST PRACTICES FOR BATTERY LIFE 9
11. EXPLODED VIEWS AND PARTS LIST 10-13
    - FAN PARTS LIST 10
    - FAN EXPLODED VIEW 11
    - FRAME PARTS LIST 12
    - FRAME EXPLODED VIEW 13

1. Breakage or Damage During Shipment

The transportation company is fully responsible for all shipping damage and will resolve problems promptly if you handle it correctly. Please read these instructions carefully.

Examine the contents of all shipping cases. If you find any damage, call your transportation agent at once and have them make a description on the freight or express bill describing the damage and the number of pieces. Then write us and we will send you the original bill of lading. Get a claim blank from the express or truck company. Fill the claim form out. Attach the claim blank to the original bill of lading together with a copy of our invoice. Attach a memo on which you show the value of the damaged goods. Mail or hand these papers to your local transportation agent. They will process your claim with reasonable promptness.

Please note, we cannot and will not enter claims for damages. If we filed claim here, it would be sent to your local freight agent for verification and investigation. This time can be saved by your filing the claim directly. Every consignee is on the ground floor and in contact with the local agent who inspects the damaged goods, and thus, each claim can be given individual attention.

Since our goods are packed to comply with the regulations of all railroad, truck, and express companies, we cannot allow deduction from any invoice because of any damage, however, be sure to file your claim promptly. Our goods are sold F.O.B. factory. We take receipt from the transportation company certifying that the goods were delivered to them in good order, and our responsibility ceases.

It is seldom that any breakage or damage occurs in any of our shipments, and in no case will the customer be out any expense if they follow the above instructions.

Be sure to keep all damaged goods subject to examination of the truck or express company inspector, who may call on you some time later. These damaged goods, of course, will belong to them, and they will inform you what to do with them. If you dispose of these damaged goods, your claim may not be paid.

2. General Description and Specifications

Super Vac ventilators are specifically designed to provide a convenient and portable source of air. Super Vac positive pressure ventilators are tested to AMCA Standard 240-15, for use in extreme conditions.

Model #	RPM	Motor	HxWxD	Weight
V16-BD-WH	2000	1 HP Variable Speed DC	24.25” x 23.75” x 12.25”	53 lbs

Specifications are subject to change without notification. Refer to model decal affixed to ventilator to determine actual specifications.

This ventilator is designed for high powered air movement. Each blade is dynamically balanced for high efficiency and long life.

3. Product Safety Precautions ⚠WARNING

- Do not use the ventilator for purposes other than its’ intended use.
- Wear eye and ear protection when operating the ventilator.
- Never operate ventilator while fatigued.
- Do not disassemble or modify the ventilator in any way. Doing so may lead to mechanical failure or personal injury.
- Do not wear loose clothing that could become entangled in the operating ventilator.
- Never permit anyone to operate ventilator without proper instruction.
- Do not operate ventilator without proper inlet or outlet guards in place. If guards are missing or damaged, contact factory for replacements.
- Do not place fingers or other foreign objects through inlet or outlet guards. Should a foreign object enter the ventilator, immediately stop motor. Be certain all mechanical motion has stopped. Do not use with any power voltage other than the indicated voltage.
- Never handle energized power cords with wet hands.
- Do not place or operate ventilator on unsteady tables, slanted surfaces or other unstable surfaces. Never use this ventilator in any explosive environment.
- Never let extension cords or plug connections lay in water. Locate the ventilator so that it cannot fall into water inadvertently.
- Never store or carry the battery pack so that metal objects can contact exposed battery terminals. Transporting batteries can possibly cause fires if the battery terminals contact loose nails, screws, keys, hand tools and the like.

4. Before Operating Ventilator

1. This ventilator operates on any two of the FlexVolt DeWalt batteries of the same Amp-Hour rating.
2. **CAUTION** A complete inspection of the ventilator should be made prior to operation.
   a. Check all threaded fasteners for proper tightness.
   b. Inspect inlet and outlet guards for damage or missing pieces. Replace damaged or missing guards before operating ventilator.
3. **CAUTION** If using shore or mains power, then:
   a. Never use power cords with frayed, cut, or brittle insulation.
   b. Inspect power cord plug for proper connections to the ground fault interrupter circuit.

Airflow VS Setback

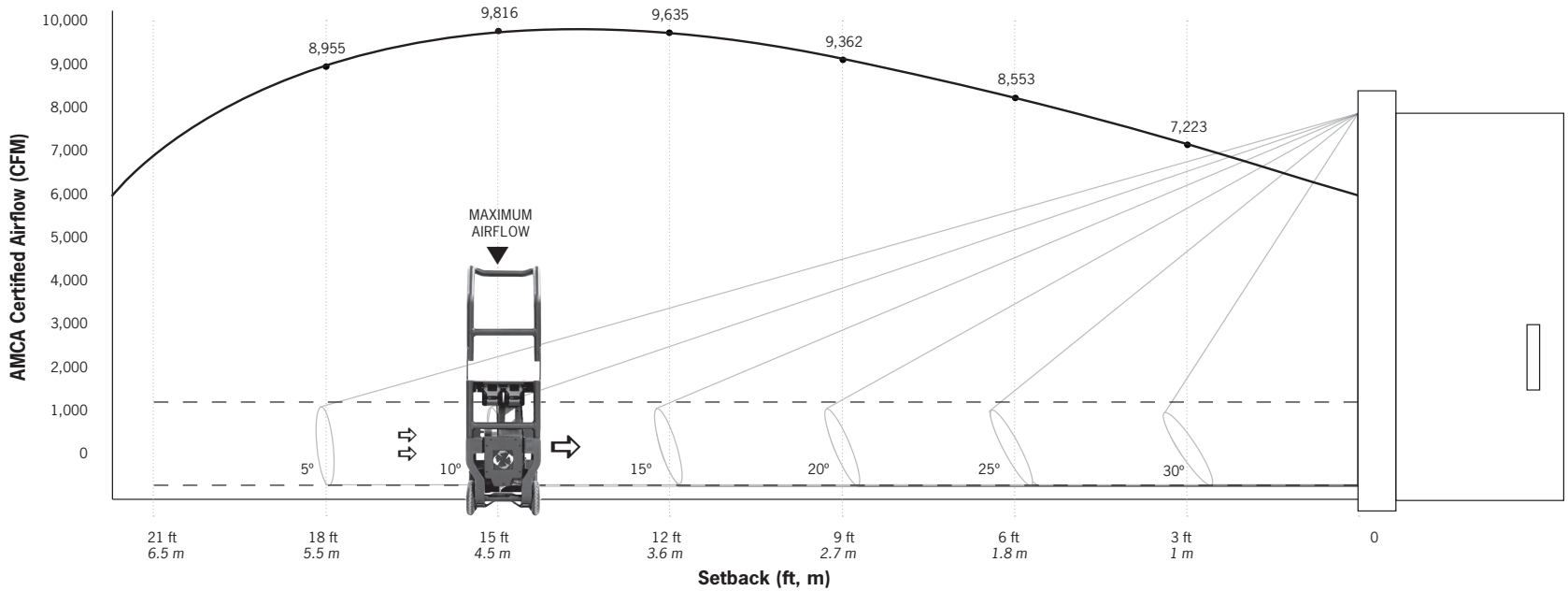

The Air Movement and Control Association International Inc. (AMCA) is a not-for-profit international association of the world's leading manufacturers of air system equipment. Super Vac ventilators have been tested through this third-party organization for over 30 years in order to provide our customers confidence that our airflow values are correctly measured and advertised. In order to view all AMCA Certified Products according to ANSI/AMCA Standard 240, follow this link. http://www.amca.org/certified-listed/type_company.php?pid=13&pn=Positve%20Pressure%20Ventilator.

5. Operation

- ⚠WARNING Use caution not to direct toxic fumes into confined spaces with the ventilator.
- Insert (2) DeWalt FlexVolt batteries until it clicks.
- Battery removal will get easier with more remove/replace cycles.
- Fan will need to be reset (turned off & on) if a new battery is inserted.
    - If fan is not reset, then the fan will not recognize the new battery and run until previous battery is empty.
- If using shore (mains) power, use an extension cord to connect to 110 – 240V AC.
- Press and hold power button until blue backlight indicates powering up.
- When the fan is on, it will need to run at the minimum speed allowed by DeWalt. (This feature is to protect the batteries from small parasitic draws)
- Power button will indicate approximate power left. (It is normal for colors to flicker back and forth.)
    - Green: 50 - 100%
    - Yellow: 20 - 50%
    - Red: 0 - 20% (Low Battery Warning: Front Facing LED will also flash if turned on)

V16-BD Runtimes [at max speed]

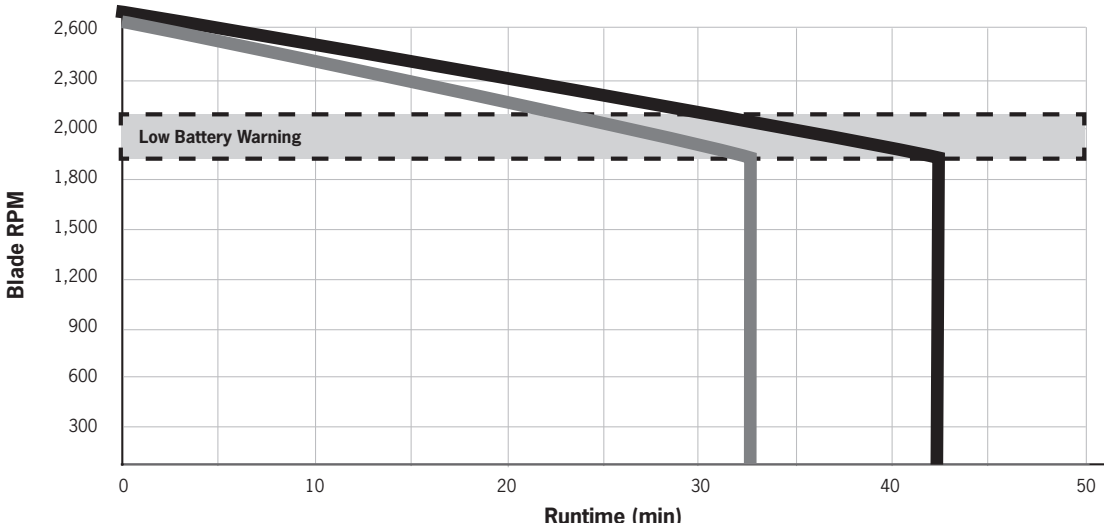

*Runtimes dependent on air density, temperature and battery condition. Test data shown taken at 5000ft elevation, 25% RH, 70°F with new batteries.
*Air density is primarily affected by elevation, humidity and temperature.
*At temperatures below freezing expect battery life to decrease.
*Other DeWalt FlexVolt Batteries will operate the fan, but at reduced runtimes.

6. Charging the Battery Packs

Remove both DeWalt FlexVolt batteries from fan.

CAUTION Insert in DeWalt Charger. Use only DeWalt brand battery chargers.

Using DeWalt AC Fast Charger, batteries will recharge in 60-120 minutes, depending on Amp-Hour rating.

Other DeWalt chargers, including units that work with vehicle DC power, may take longer to fully charge the batteries.

Charger Operation:

Charge indicators

	Charging	— — — —	
	Fully Charged	————————	
	Hot/Cold Pack Delay	— — — | ———	

CAUTION

- Never store or charge the battery pack below 40°F (4°C) or above 105°F (41°C).
- Never use/charge chargers or batteries in explosive atmospheres.
- Never attempt to open the battery pack. If cracked or damaged, return it to a service center for recycling.
- Do not splash or immerse charger in water or other liquids.

7. Maintenance and Repair

CAUTION Maintenance should only be performed by experienced and trained personnel. If you have any questions please contact Super Vac before attempting any maintenance at www.supervac.com or 1-800-525-5224.

WARNING Be sure the ventilator is disconnected from the power source and both batteries have been removed before performing any maintenance or repair. The motor is of heavy duty ball bearing construction. The unit is completely sealed and requires no lubrication for the life of the motor.

CAUTION The ventilator blade should be specially checked for build-up of material or dirt which may cause an imbalance. Excessive imbalance can lead to accelerated wear on motor bearings and vibration. Remove front ventilator guard. Clean blade and inside housing with mild detergent and water. Do not use abrasives, sharp instruments or caustic solvents that may scratch or damage the fan blade.

8. Warranty

DeWalt products carry a separate 3 year limited warranty. For further information contact them at www.dewalt.com or 1-800-4-DeWalt.

Super Vacuum Manufacturing Company warrants that the equipment is free from defects in materials and workmanship when used and operated for a period of five years, excluding the motor which has a 3-year warranty. The responsibility of Super Vacuum Manufacturing Company under this limited warranty is limited to the repair and replacement of any parts which are found defective and which are returned to Super Vacuum Manufacturing Company at 3842 Redman Dr, Fort Collins, CO 80524 with transportation charges prepaid (C.O.D. shipments will not be accepted).

Prior to returning defective parts to SUPER VACUUM MANUFACTURING COMPANY, the original purchaser shall make a claim in writing to SUPER VACUUM MANUFACTURING COMPANY at the above address indicating the model number and type of defect. No parts or equipment will be received by SUPER VACUUM MANUFACTURING COMPANY for repair or replacement under this warranty without specific written authority from it in advance.

Any parts damaged by improper installation, overloading, abuse or accident of any type or cause are not covered by this warranty.

All equipment manufactured by us is pre-run and tested before leaving our plant, and is shipped in good working order and condition. We therefore extend to the original purchasers the following Limited Warranty for the period of five years from the original date of purchase:

1. This warranty does not apply to defects caused by accident, misuse, neglect, or wear and tear, nor can we be held responsible for incidental and consequential expense and loss, nor does this warranty apply to equipment where alterations have been executed without our knowledge or consent. These conditions are readily discernible when the equipment is returned to us for inspection.
2. On all component parts not manufactured by SUPER VACUUM MANUFACTURING COMPANY, their warranty is to the extent that the manufacturer of such component warrants them to SUPER VACUUM MANUFACTURING COMPANY, if at all. Look in your local business phone directory for the nearest repair station for the brand of parts you have or write to us for the address.
3. If equipment received is found to have been damaged in transit, a claim should be made against the carrier within three days, as we assume no responsibility for such damage.
4. Any service other than our Authorized Service voids this warranty.
5. This warranty is in lieu of and is intended to exclude all other warranties, express or implied, oral or written, including any warranties of MERCHANTABILITY or FITNESS for a particular purpose.

9. Contact Information

For parts or service information, contact:

Super Vacuum Manufacturing Company, Inc.

3842 Redman Dr.
Fort Collins, CO 80524

Phone: 800-525-5224
970-297-7100

Fax: 970-297-7099

Email : info@supervac.com
Internet: www.supervac.com

10. Best Practices for Battery Life

1. IS IT BETTER FOR DeWALT® BATTERIES TO BE COMPLETELY DISCHARGED BEFORE CHARGING? No. Just the opposite. You should stop using a battery as soon as you feel a substantial decrease in power from the tool. Completely running down a battery may damage it. Do not tape the trigger to run down the battery.

2. WHAT IS MEMORY, AND DO DeWALT BATTERIES HAVE IT? Memory is one of many conditions which causes a loss of run-time. Memory is created from repetitive light use in the exact same application (i.e. Cordless Phones, Video Cameras, Electric Shavers, etc.) Our products rarely see light use or the exact same loads, due to variability from the user, the accessory size, as well as the material. The same variability which causes different run-times prevents our cells from developing memory. Power tools are considered high-drain applications. Memory typically develops in lower-drain rate applications, such as cordless phones, laptops, etc., because the rate at which the battery is draining is continuously the same. Power tools draw higher currents and have sporadic drain rates minimizing the opportunity for the battery to develop a memory.

3. DOES IT HURT DeWALT BATTERIES TO LEAVE THEM IN THE CHARGER? No. The DeWALT chargers have a maintenance mode which allows batteries to remain in the charger, maintaining a fully charged pack until the user is ready to work. If DeWALT NiCad batteries are stored outside of the charger, they will discharge naturally, 15-20% the first 24 hours, 7-10% the next day, and about 1% every day thereafter. NiCad batteries lose the bulk of the capacity when outside of the charger in the first 3 days. In fact, it is better for the battery to leave it in the charger to be sure it goes through Equalization and Maintenance Modes. One of the benefits of DeWALT XRP™ Lithium Ion batteries is that they have limited self-discharge. Storing DeWALT Lithium Ion batteries outside of the charger will not result in loss of charge. Learn more about brushless tools technology.

4. WHAT CAN I DO TO IMPROVE THE RUN-TIME OF MY BATTERY? If no permanent damage has been done to your battery, you may be able to improve its run-time. The correct procedure for charging your batteries is as follows:

- Discharge the battery under normal use. Remove the battery, once you feel a loss of power from the tool. Do not tape the trigger ON.
- Let the battery sit out of the charger for a least 2 hours until the battery is at room temperature.
- Place the battery in the charger overnight to allow for a full charge on each individual cell (A minimum of 8 hours at room temperature).
- If there is no difference in run-time, there is either permanent damage or the battery has reached the end of its usable life. In either case, the battery should be replaced.

5. DOES THE OUTSIDE TEMPERATURE AFFECT BATTERIES? HOW? Yes. If the batteries are too hot (105°F or higher) or too cold (below 40°F), the batteries will not take a full charge. Attempting to charge batteries outside the 40°F-105°F range can result in a permanent loss of run-time. When batteries are being charged and discharged, a chemical reaction is taking place, and if it is too hot or cold the chemical reaction is disturbed causing a loss of run-time.

6. CAN THE DeWALT CHARGER BE USED WITH A GENERATOR? Yes. All DeWALT chargers, excluding the DW9106, hawve been designed to handle the variations in voltage and current delivered by generators.

7. SHOULD ANY SPECIAL PRECAUTIONS BE TAKEN WHEN TRANSPORTING OR TRAVELING WITH BATTERIES? Transporting batteries can possibly cause fires if the battery terminals inadvertently come in contact with conductive materials such as keys, coins, hand tools and the like. The U.S. Department of Transportation Hazardous Material Regulations (HMR) actually prohibit transporting batteries in commerce or on airplanes (i.e. packed in suitcases and carryon luggage) UNLESS they are properly protected from short circuits. So anytime you transport individual batteries, make sure that the battery terminals are protected and well insulated from materials that could contact them and cause a short circuit. For more information consult the U.S. DOT website.

8. WHAT SHOULD BE DONE WITH BATTERIES ONCE THEY HAVE GONE BAD? RECYCLE THEM. DeWALT is an active participant with RBRC (Rechargeable Battery Recycling Corporation), the organization which is the international leader in the collection, transportation and recycling of NiCad cells. Old batteries should be disposed of at DeWALT Service Centers

Source: https://www.dewalt.com/dewalt-dna/featured-articles/best-practices-for-battery-life

11. Fan Parts List

PARTS LIST							
ITEM	QTY	PART NUMBER	DESCRIPTION	ITEM	QTY	PART NUMBER	DESCRIPTION
1	1	V16-BX	V16-BX, ASSY	18	4	032-26263	SCREW, M3X0.5 ANSI M, 12mm, PPMS, SS, BLACK
2	1	019-20510	PLATE, TOP, VXX-BX	19	1	005-18025	SHROUD SLEEVE SEAL SPLIT, HEI
3	2	005-15344	HOLDER, BATTERY, DEWALT, V1X-BD	20	4	032-28702	WASHER, M5 X 0.8 ANSI M, SPLIT LOCK, SS
4	4	005-15345	SPACER, BATTERY, DEWALT, V1X-BD	21	4	032-28425	SCREW, M5X0.8 ANSI M, 12mm, BHCS, SS
5	1	019-20105	SHROUD, WELDMENT, V16-BX	22	1	008-14166	BUSHING, MARTIN, G, 12MM BORE, VXX-BX
6	8	032-21006	SCREW, 6-32 UNC X 7/8 in, PFMS, SS	23	1	003-15330	BLADE, PLASTIC, 30DEG, V16-BX
7	4	005-14081	CONNECTOR, ELEC, BATTERY, DEWALT, V1X-BD	24	2	032-24440	WASHER, 1/4-20, SPLIT LOCK, S, ZINC
8	1	005-18010	SEAL, CONTA-CLIP- BLANK	25	2	032-24339	SCREW, 1/4-20 UNC X 1 in, HHCS, SS
9	2	005-18013	SEAL, CONTA-CLIP- 2x5MM	26	1	012-15392	STREAMSHAPER GUARD FOR 16" PPV FAN
10	4	005-14090	TERMINAL, ELECTRIC RING, #10, 10-12	27	4	032-22414	SCREW, 10-24 UNC X 1/2 in, PPMS, SS, BLACK, PATCH
11	4	032-21517	WASHER, 6-32, INTERNAL STAR, S, ZINC	28	1	005-15354	POWER SUPPLY, 750W, 48V, V18-BD
12	4	032-20867	SCREW, 6-32 UNC X 1/2 in, PPMS, SS	29	2	005-15346	BATTERY, DEWALT, 9AH, V1X-BD (MORE OPTIONS AVAILABLE)
13	12	032-21511	NUT, 6-32 UNC, HEX, S, ZINC	30	1	025-16042	DECAL, SHROUD, CHEVRON, V1X-BX
14	1	021-10523	MOTOR,1 HP TEAO,48VDC, V1X-BX	31	1	025-16080	DECAL, MODEL TOP, V16-BD-WH
15	2	005-14088	PAD, THERMAL HEI MOTOR, VXX-BX	32	1	025-16081	DECAL, SERIAL NUMBER, V16-BD-WH
16	1	021-10524	COVER, MOTOR, V1X-BX	33	1	025-16020	DECAL, SHROUD, CENTER, V1X-BX
17	1	065-12852	STRAIN RELIEF,DOMED,SCR .24-.47,1/2 NPT,BLACK				

Fan Exploded View

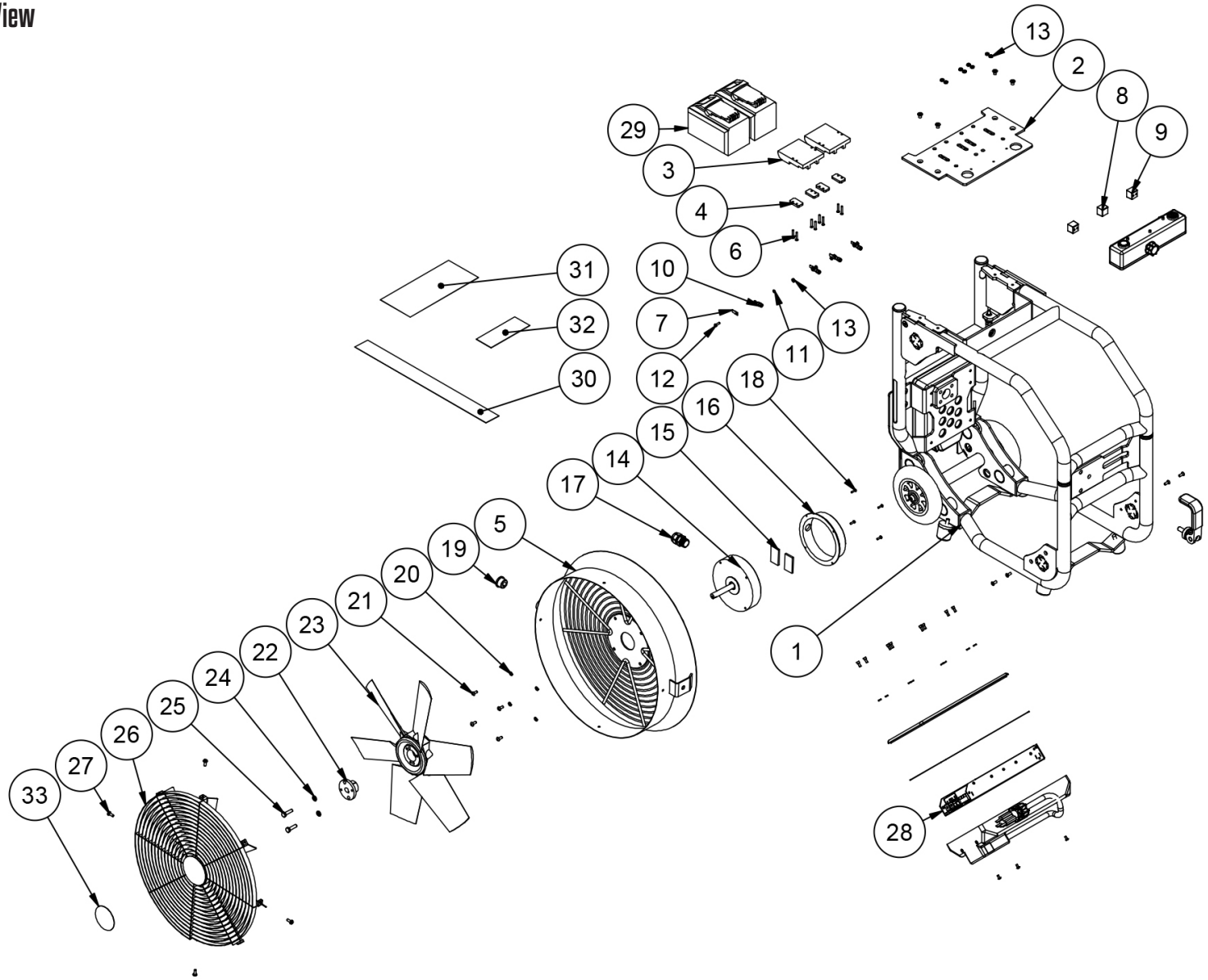

Frame Parts List

PARTS LIST				PARTS LIST			
ITEM	QTY	PART NUMBER	DESCRIPTION	ITEM	QTY	PART NUMBER	DESCRIPTION
1	2	005-10270	WASHER, RUBBER, ROTATION, V1X-BX	33	2	005-18010	SEAL, CONTA-CLIP- BLANK
2	1	005-18005	BOX POWER SUPPLY, VXX-BX	34	1	005-18014	SEAL, CONTA-CLIP - 10MM
3	1	005-18020	BOX POWER SUPPLY GASKET, V20-BX	35	1	005-10180	CORD, POWER SUPPLY, 120VAC, 24 IN.
4	1	005-18006	BOX POWER SUPPLY COVER, V20-BX	36	2	005-18015	SEAL, CONTA-CLIP - 13-14 mm
5	2	008-13804	WHEEL, V1X-BX, 6 INCH	37	2	005-18017	SEAL, CONTA-CLIP - 9-10 mm
6	4	024-13473	FEET RUBBER CONE SHAPE VBM-4002	38	6	032-22618	SCREW, 10-24 UNC X 1/2 in, SHCS, SS, BLACK
7	1	019-20509	TUBE WHEEL SPACER, V20-BX	39	6	032-22980	0-RING, 10-24 UNC, HARDWARE BUNA
8	2	012-14196	INSERT, 3/8-16, TUBE, V1X-BX AXLE MOUNT	40	25	032-22249	0-RING, 8-32 UNC, HARDWARE BUNA
9	6	005-10256	PLUG, 1.25, TUBE END ROUND, VALOR	41	21	032-21886	SCREW, 8-32 UNC X 3/8 in, SHCS, SS, BLACK
10	1	005-18002	BOX CONTROLLER COVER, VXX-BX	42	4	032-21888	SCREW, 8-32 UNC X 5/8 in, SHCS, SS, BLACK
11	1	005-10255	T-HANDLE, PLUNGER, VALOR	43	6	032-22482	SCREW, 10-24 UNC X 1/2 in, PFMS, SS, BLACK
13	1	008-14131	PLASTIC, PAC CORD CLAMP	44	2	032-22414	SCREW, 10-24 UNC X 1/2 in, PPMS, SS, BLACK, PATCH
14	1	005-10268	VALOR, POTENTIOMETER, VXX-BX	45	3	032-22821	SCREW, 10-24 UNC X 3/8 in, BHCS, SS, BLACK, PATCH
15	1	005-13562	SWITCH, MOMENTARY, RGB, V1X-BX	46	4	032-22550	SCREW, 10-24 UNC X 1/2 in, PFMS, SS, BLACK, PATCH
16	1	005-13564	SWITCH, LATCHING, V1X-BX	47	2	032-24486	SCREW, 5/16-18 UNC X 1 in, PFMS, SS, BLACK
17	1	005-10267	KNOB, POTENTIOMETER,V1X-BX	48	2	032-10789	NUT,NYLOCK, 5/16-18 UNC,SS
18	2	STD HARDWARE-BHSH-713	STD HARDWARE-BHSH-713, 3/8-16x2-1/2, S	49	1	034-11073	NUT,NYLOCK, 3/8-16 UNC,SS
19	4	032-10140	INSERT, BRASS HEAT SET, 4/40	50	3	032-27672	SCREW, M4X0.7 ANSI M, 8mm, BHCS, SS, BLACK, PATCH
22	1	005-18001	BOX CONTROLLER, VXX-BX	51	4	032-24011	SCREW, 1/4-20 UNC X 3/8 in, PFMS, SS, BLACK, PATCH
23	1	005-18050	PLASTIC SLEEVE MOUNT, V16-BX	52	2	032-22982	NUT, 10-24 UNC, INSERT, .13-.225 GRIP RANGE
24	1	005-18053	PLASTIC, SLEEVE LOCK, VXX-BX	53	6	032-10880	NUTSERT, 10-24, .02-.13 GRIP RANGE
25	1	021-10514	CONTROLLER, HG, 18V / 36V DC MOTOR	54	4	032-20134	SCREW, 4-40 UNC X 1/4 in, PPMS, SS
26	27	032-10142	INSERT, BRASS HEAT SET, 8/32	55	1	019-20499	FRAME WLDMENT, V16X-BX
27	1	005-18021	BOX CONTROLLER GASKET, VXX-BX	56	1	019-20462	WLDMNT HANDLE, V16X-BL
28	1	005-18003	BOX TOP ELECTRIC, VXX_BX	57	2	032-21682	SCREW, 8-32 UNC X 3/8 in, PPMS, SS, BLACK, PATCH
29	1	005-18004	BOX TOP ELECTRIC COVER, VXX-BX	58	1	005-13563	LIGHT, LED, V1X-BX
30	4	032-10143	INSERT, BRASS HEAT SET, 10/24	59	2	005-10271	GROMMET,PUSH-IN,0.75 ID,1.125 OD,0.0938 GROOVE
31	2	019-20455	PLASTIC STAIR SKID, V16X-BX	60	1	025-16032	DECAL, SV LOGO, SIDE, VXX-FX
32	2	032-10120	WASHER, PLASTIC, 5/16	61	1	019-20551	HANDLE, CAM LOCK ASSY, VXX_BX
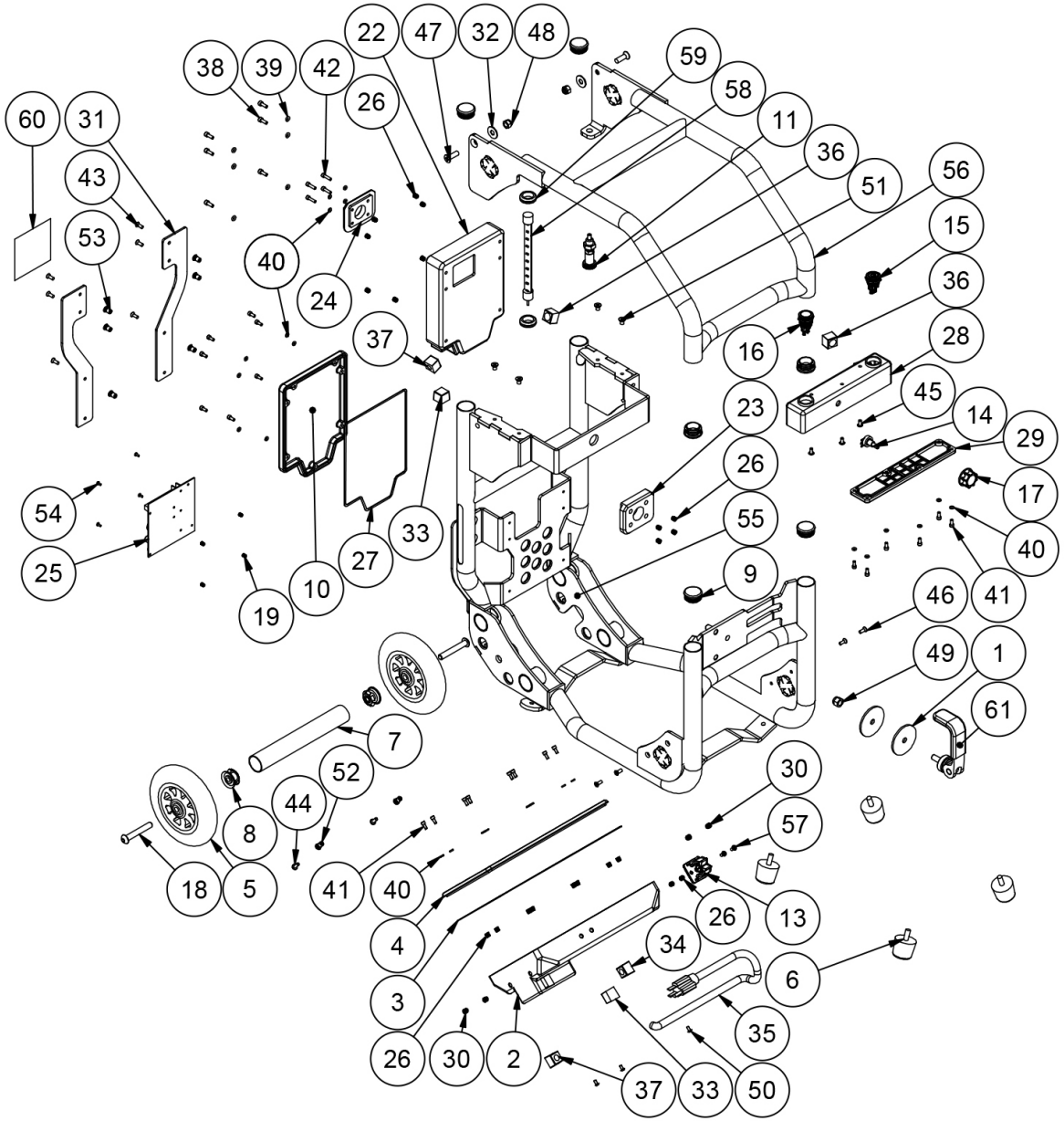
Frame Exploded View