READ THIS FIRST

VENTILATOR USER GUIDE

MODEL 716-E2

SUPERVAC

DANGER

PERSONAL RESPONSIBILITY CODE

The member companies of FEMSA that provide emergency response equipment and services want responders to know and understand the following:

1. Firefighting and Emergency Response are inherently dangerous activities requiring proper training in their hazards and the use of extreme caution at all times.
2. It is your responsibility to read and understand any user's instructions, including purpose and limitations, provided with any piece of equipment you may be called upon to use.
3. It is your responsibility to know that you have been properly trained in Firefighting and/or Emergency Response and in the use, precautions, and care of any equipment you may be called upon to use.
4. It is your responsibility to be in proper physical condition and to maintain the personal skill level required to operate any equipment you may be called upon to use.
5. It is your responsibility to know that your equipment is in operable condition and has been maintained in accordance with the manufacturer's instructions.
6. Failure to follow these guidelines may result in death, burns or other severe injury.

FEMSA

Fire and Emergency Manufacturers and Services Association, Inc.
P.O. Box 147, Lynnfield , MA 01940 www.FEMSA.org

Copyright 2006 FEMSA. All Rights Reserved

USER GUIDE

This manual covers the description, cautions, operation, and maintenance of the Super Vac 716-E2

⚠WARNING *Read this manual before operating the ventilator.*

Save this guide for future reference.

CONTENTS

1. BREAKAGE OR DAMAGE DURING SHIPMENT..... 2
2. GENERAL DESCRIPTION AND SPECIFICATIONS..... 3
3. PRODUCT SAFETY PRECAUTIONS..... 3
4. BEFORE OPERATING VENTILATOR..... 4
5. OPERATION..... 4
6. MAINTENANCE AND REPAIR..... 5
7. EXTENSION CORDS..... 5
8. WARRANTY..... 6
9. CONTACT INFORMATION..... 7
10. PARTS LIST..... 8
11. EXPLODED VIEW..... 9

1. Breakage or Damage During Shipment

The transportation company is fully responsible for all shipping damage and will resolve problems promptly if you handle it correctly. Please read these instructions carefully.

Examine the contents of all shipping cases. If you find any damage, call your transportation agent at once and have them make a description on the freight or express bill describing the damage and the number of pieces. Then write us and we will send you the original bill of lading. Get a claim blank from the express or truck company. Fill the claim form out. Attach the claim blank to the original bill of lading together with a copy of our invoice. Attach a memo on which you show the value of the damaged goods. Mail or hand these papers to your local transportation agent. They will process your claim with reasonable promptness.

Please note, we cannot and will not enter claims for damages. If we filed claim here, it would be sent to your local freight agent for verification and investigation. This time can be saved by your filing the claim directly. Every consignee is on the ground floor and in contact with the local agent who inspects the damaged goods, and thus, each claim can be given individual attention.

Since our goods are packed to comply with the regulations of all railroad, truck, and express companies, we cannot allow deduction from any invoice because of any damage, however, be sure to file your claim promptly. Our goods are sold F.O.B. factory. We take receipt from the transportation company certifying that the goods were delivered to them in good order, and our responsibility ceases.

It is seldom that any breakage or damage occurs in any of our shipments, and in no case will the customer be out any expense if they follow the above instructions.

Be sure to keep all damaged goods subject to examination of the truck or express company inspector, who may call on you some time later. These damaged goods, of course, will belong to them, and they will inform you what to do with them. If you dispose of these damaged goods, your claim may not be paid.

2. General Description and Specifications

Super Vac ventilators are specifically designed to provide a convenient and portable source of air. *Super Vac* positive pressure ventilators are tested to AMCA PPV Standard 240-95, for use in extreme conditions.

Model #	RPM	Voltage	Motor	HxWxD	Weight
716-E2	1750	115V AC	1 Hp Single Speed	20” x 20.5” x 16”	67 lbs

Specifications are subject to change without notification. Refer to model decal affixed to ventilator to determine actual specifications.

This ventilator is designed for high powered air movement. *Super Vac's* propeller produces a greater intake of air and eliminates turbulence at the tips. Each blade is dynamically balanced for high efficiency and long life.

3. Product Safety Precautions ⚠WARNING

- Do not use the ventilator for purposes other than its' intended use.
- Wear eye and ear protection when operating the ventilator.
- Never operate ventilator while fatigued.
- Do not disassemble or modify the ventilator in any way. Doing so may lead to mechanical failure or personal injury.
- Do not wear loose clothing that could become entangled in the operating ventilator.
- Never permit anyone to operate ventilator without proper instruction.
- Do not operate ventilator without proper inlet or outlet guards in place. If guards are missing or damaged, contact factory for replacements.
- Do not place fingers or other foreign objects through inlet or outlet guards. Should a foreign object enter the ventilator, immediately stop motor. Be certain all mechanical motion has stopped. Do not use with any power voltage other than the indicated voltage.
- Never handle energized power cords with wet hands.
- Do not place or operate ventilator on unsteady tables, slanted surfaces or other unstable surfaces. Never use this ventilator in any explosive environment.
- Never let extension cords or plug connection lay in water. Locate the ventilator so that it cannot fall into water inadverntly.

4. Before Operating Ventilator

- **CAUTION** Always operate this ventilator from a proper AC power source supplied through a ground fault interrupter receptacle. Test receptacle for ground fault before plugging in the ventilator power cord.
- Never use power cords with frayed, cut, or brittle insulation.
- **CAUTION** A complete inspection of the ventilator should be made prior to operation.
- Inspect power cord plug for sound connections to the ground fault interrupter circuit.
- Check all threaded fasteners for proper tightness.
- Inspect inlet and outlet guards for damage or missing pieces. Replace damaged or missing guards before operating ventilator.

5. Operation

CAUTION Check ventilator inlet and outlet guards for obstructions. Check and remove from immediate surrounding area any objects that could be drawn into the ventilator intake.

WARNING Use caution not to direct toxic fumes into confined spaces with the ventilator. Please refer to the Super Vac Training Manual for Smoke Ventilation for comprehensive instruction on effective ventilation practices.

Insert power cord plug into 115V AC power receptacle to begin ventilation.

To stop ventilation remove power cord plug from AC power receptacle.

CAUTION Motors are equipped with thermal overload protection. When internal motor temperature exceeds design limits, the motor will automatically shut off. Motor will automatically restart when it cools sufficiently after overheating. Remove power cord plug from AC receptacle before examining or working on a motor which has stopped because of overheating. Thermal overload protection sensitivity increases with frequency. Take preventative steps to correct cause of overheating to assure long motor life. Most overheating problems are associated with the use of portable power generators as the ventilator power supply.

6. Maintenance and Repair ⚠CAUTION

Maintenance should only be performed by experienced and trained personnel.

Be sure the ventilator is disconnected from the power source before performing any maintenance or repair. The motor is of heavy duty ball bearing construction. The unit is completely sealed and requires no lubrication for the life of the motor.

The ventilator blade should be specially checked for build-up of material or dirt which may cause an imbalance. Excessive imbalance can lead to accelerated wear on motor bearings and vibration. Remove ventilator guards. Clean blade and inside housing with mild detergent and water. Do not use abrasives, sharp instruments or caustic solvents that may scratch or damage the aluminum alloy blade.

Intake and exhaust guards are not interchangeable. When replacing guards after cleaning, position them with the rings to the outside with the row of spot welds holding the rings on the bottom.

7. Extension Cords ⚠CAUTION

Do not use reeled or coiled cable. Reeled or coiled cable can produce a counter EMF (electromotive force). The counter EMF can reduce the current carrying capability of an extension cord. This counter EMF will result in a voltage drop within the motor instigating a thermal overload condition. Power supply must handle wattage requirements. When conditions require the use of reeled cable, unreel all cable and place on the ground in very loose overlapping non-uniform coils.

Units*	Watts **	Minimum Wire Gauge	Maximum Cable Length
1	2000	14	150 ft
2	4000	12	250 ft
3	6000	10	350 ft

** Multiple units powered by one extension cord*
*** Minimum running wattage for multiple units. Startup amerage draw is much higher.*

8. Warranty

Super Vacuum Manufacturing Company warrants that the equipment is free from defects in materials and workmanship when used and operated for a period of five years. The responsibility of Super Vacuum Manufacturing Company under this limited warranty is limited to the repair and replacement of any parts which are found defective and which are returned to Super Vacuum Manufacturing Company at 3842 Redman Dr, Fort Collins, CO 80524 with transportation charges prepaid (C.O.D. shipments will not be accepted).

Prior to returning defective parts to SUPER VACUUM MANUFACTURING COMPANY, the original purchaser shall make a claim in writing to SUPER VACUUM MANUFACTURING COMPANY at the above address indicating the model number and type of defect. No parts or equipment will be received by SUPER VACUUM MANUFACTURING COMPANY for repair or replacement under this warranty without specific written authority from it in advance.

Any parts damaged by improper installation, overloading, abuse or accident of any type or cause are not covered by this warranty.

All equipment manufactured by us is pre-run and tested before leaving our plant, and is shipped in good working order and condition. We therefore extend to the original purchasers the following Limited Warranty for the period of five years from the original date of purchase:

1. This warranty does not apply to defects caused by accident, misuse, neglect, or wear and tear, nor can we be held responsible for incidental and consequential expense and loss, nor does this warranty apply to equipment where alterations have been executed without our knowledge or consent. These conditions are readily discernible when the equipment is returned to us for inspection.
2. On all component parts not manufactured by SUPER VACUUM MANUFACTURING COMPANY, their warranty is to the extent that the manufacturer of such component warrants them to SUPER VACUUM MANUFACTURING COMPANY, if at all. Look in your local business phone directory for the nearest repair station for the brand of parts you have or write to us for the address.
3. If equipment received is found to have been damaged in transit, a claim should be made against the carrier within three days, as we assume no responsibility for such damage.
4. Any service other than our Authorized Service voids this warranty.
5. This warranty is in lieu of and is intended to exclude all other warranties, express or implied, oral or written, including any warranties of MERCHANTABILITY or FITNESS for a particular purpose.

9. Contact Information

SUPERVAC

For parts or service information, contact:

Super Vacuum Manufacturing Company, Inc.

3842 Redman Dr.
Fort Collins, CO 80524

Phone: 800-525-5224
970-297-7100

Fax: 970-297-7099

Email : info@supervac.com
Internet: www.supervac.com

10. Parts List

1	012-10285	1	GUARD 716 16” FRONT-PAINTED
2	032-15540	8	10-24 X 1/2” PHIL PH MS BLACK
3	032-10754	2	1/4” LOCK WASHER ZINC
4	032-10745	2	1/4 - 20 X 1” HEX CS ZINC
5	008-10193	1	KEYSTOCK 3/16” X 1 3/8” SQUARE
6	008-10187	1	BUSHING BLADE MAUREY HQ 3/4”
7	003-10055	1	BLADE 16” 7 BLADE GAS FINISHED
8	032-10787	4	5/16” LOCK WASHER ZINC
9	032-10779	4	5/16 - 24 X 1 1/4” HEX CS ZINC
10	018-14030	1	SHROUD 16” W/GUARD-PAINTED
11	032-10750	3	1/4-20 NYLOK HEX NUT ZINC”
12	032-10752	3	1/4” FLAT WASHER USS ZINC
13	018-15035	1	MOTOR MOUNT, 716, GAS, PAINTED
14	032-10725	3	1/4-20 X 5/8” PHIL RH MS ZINC
15	032-14565	2	BOLT, 3/8-16 X 4 1/2, SKTHD BUTTON, ZINC
16	005-10136	4	BUSHING, REDUCER, 3/4 X 1/2
17	008-13375	2	WHEEL PNEUMATIC DW414 3” HUB CENTER
18	032-11129	2	3/8” FLAT WASHER USS ZINC
19	032-11133	2	3/8-16 NYLOK HEX NUT ZINC
20	008-10189	4	PLUG, FINISHING, 1”, SQ RIBBED, BLACK
21	018-10431	1	TUBE FRAME 16” PAINTED
22	032-14564	2	3/8-16 X 2 1/2” SOCKET BUTTON HEAD CS ZN
23	008-10212	2	WASHER FLAT #17W14930 MICRO-PLASTIC
24	032-11129	2	3/8” FLAT WASHER USS ZINC
25	032-11133	2	3/8-16 NYLOK HEX NUT ZINC
26	008-10192	1	SPRING A-180-S VALCO 40 PCS. PER LB
27	032-14564	2	3/8-16 X 2 1/2” SOCKET BUTTON HEAD CS ZN
28	032-11129	2	3/8” FLAT WASHER USS ZINC
29	032-14559	2	NUT, HEX CAP, 3/8-16, NICKEL PLATED
30	019-17014	1	716 HANDLE PAINTED
31	008-14586	2	STOCK CAP COVER FOR 716 HANDLE TAB
32	032-11133	2	3/8-16 NYLOK HEX NUT ZINC
33	024-13284	1	SPRING SADDLE ISC #0198 W.DBL GRIND
34	008-10219	1	KNOB, 716, TILT LEVER
35	019-15084	1	716 TILT LEVER
36	024-13284	1	SPRING, COMPRESSION, TILT LEVER
37	021-14917	1	MOTOR,BLUFFTON,1HP,TEAO
38	032-10777	1	BOLT, 5/16-24 X 3/4, HEX HEAD, ZINC
39	032-10791	1	5/16” FENDER WASHER ZINC
40	032-10787	1	5/16” LOCK WASHER USS ZINC
41	025-13429	1	DECAL 716EXP YELLOW SAFETY
42	025-13430	1	DECAL 716EXP SER# GREY
43	025-13426	1	DECAL, SUPER VAC, VERT LTRS, BLACK REFLT
44	005-10120	1	CORD, POWER, 14-3, SO 10FT MOLDED PLUG
45	032-10790	4	5/16-18 NYLOK HEX NUT ZINC
46	032-10786	4	5/16” FLAT WASHER ZINC
47	032-10770	4	5/16-18 X 1 1/2” HEX CS ZINC
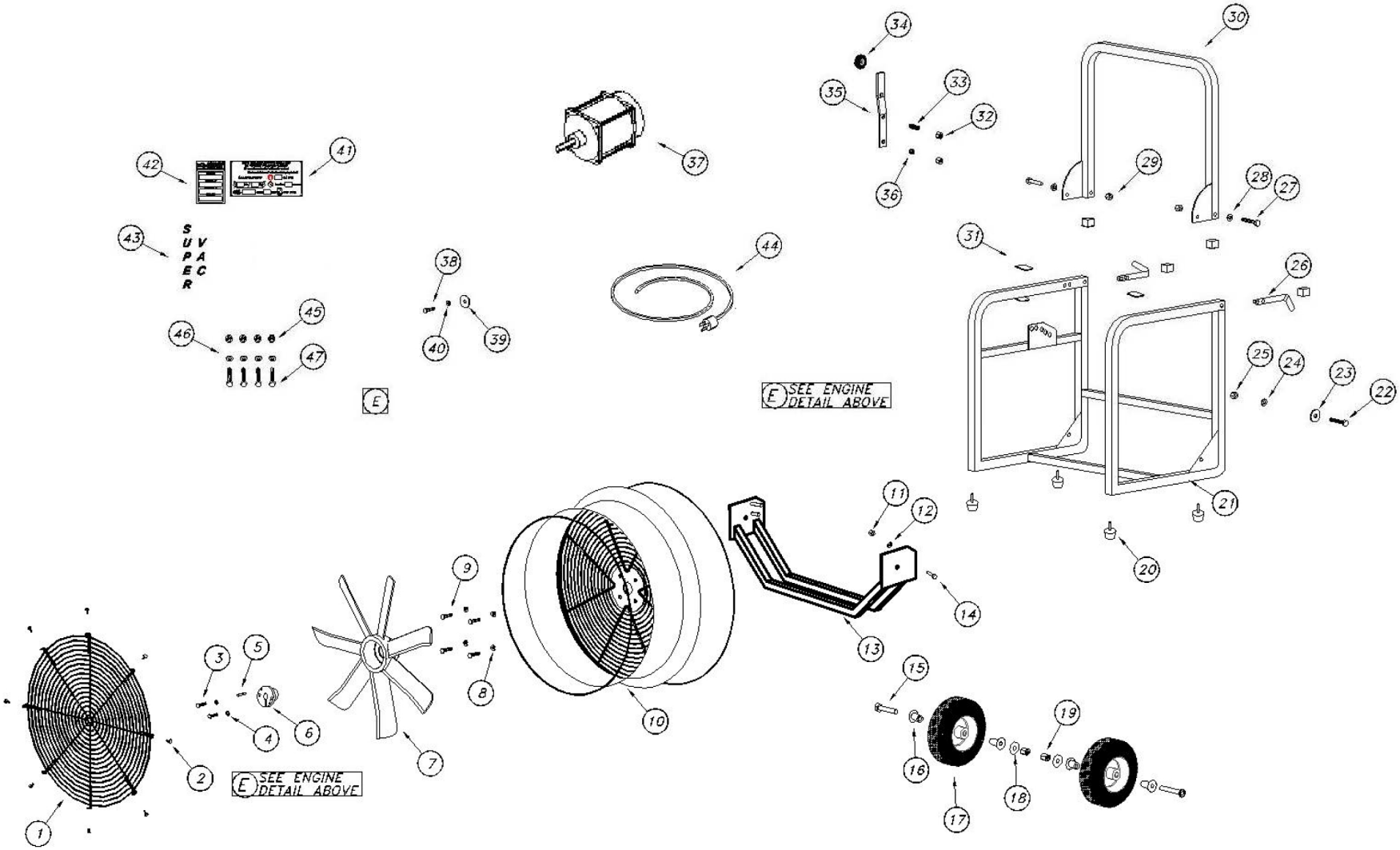
11. Exploded View